F400

400W LED Surface Moving Light

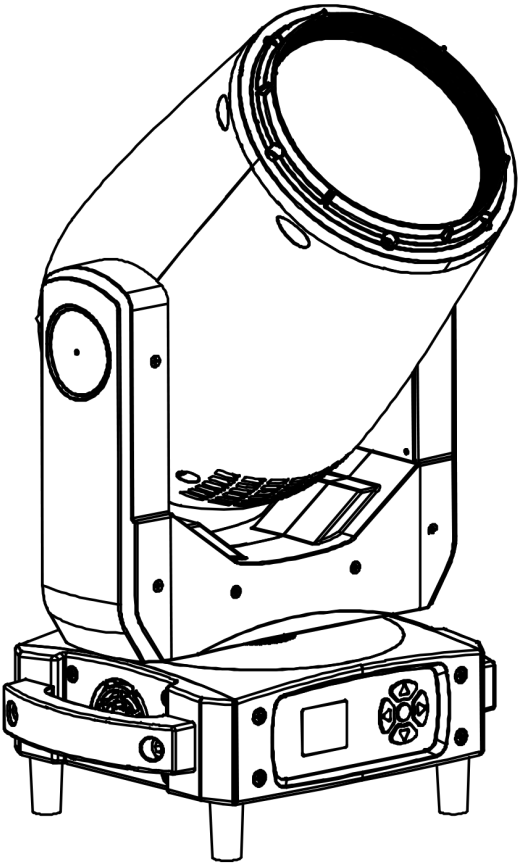

User Manual

Please read manual carefully before use

CONTENTS

1. Safety Instructions 3

2. Technical Specification 5

3. DMX Set Up 7

4. Display 8

5. Menu 9

6. LUX Data 11

7. DMX Channel List 11

8. Mounting 14

9. Product Size 15

10. Attention 16

11. Trouble Shooting 16

A. The unit does not work, no light and the fan does not work 16

B. Not responding to DMX controller 16

C. One of the channels is not working well 17

12. Fixture Cleaning 17

Thank you for choosing our LED lights. Each facility has been rigorously tested. Please check whether the facility has been damaged during transportation. If you find any parts are missing or broken, please contact the manufacturer immediately. Please do not return the product without any notice!

1.Safety Instructions

Please read this manual carefully, which includes important information on installation, use and maintenance.

Attention

- Please keep this USER MANUAL for future consultation. If you sell the facility to another user, be sure that they also receive this USER MANUAL.
- Please open and check in details and make sure there is no transportation damage.
- Before operating, ensure that the voltage and frequency of power supply match the power requirements of the facility.
- It's important to ground the yellow/green conductor to earth in order to avoid electric shock.
- The facility must be installed in a location with adequate ventilation, at least 50 cm from adjacent surfaces. Be sure that no ventilation slots are blocked.
- Make sure the power is disconnected before removing the facility.
- Make sure there are no flammable materials close to the unit while operating as it is fire hazard.
- Use safety cable when fixes this facility. Do not handle the facility by taking its head only, but always by taking its base.
- Maximum ambient temperature is 40℃. Do not operate it where the temperature is higher than this.
- Please stop using the facility for serious operating problems. Stop using the facility immediately. Never try to repair the facility by yourself, but be a professional technician. Please contact the supplier's service department

for technical support.

- Do not touch any wire during operation as high voltage might be causing electric shock.
- When the housing or lens is damaged, it must be replaced.
- Direct sunlight or any other strong light source penetrating the lens of the light will cause serious internal damage to the facility. During unpacking, installation, use and long-term outdoor idleness, it is forbidden to expose the lens of the facility to direct sunlight or any other strong light source at any angle. It is forbidden to aim the beam of one light directly at another light.

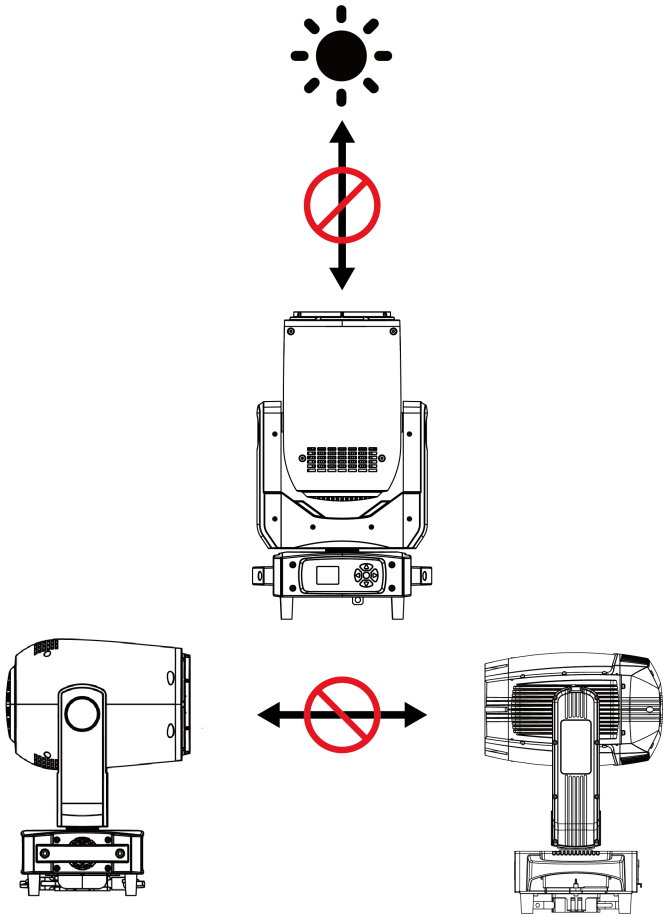

Caution

There are no accessories available, do not open the housing and try to repair the facilities yourself. Please contact our company for after service.

Installation

The unit should be mounted via its screw holes on the bracket. Always ensure that the unit is firmly fixed to avoid vibration and slipping while operating. And make sure that the structure to which you are attaching the unit is secure and is able to support a weight of 10 times of the unit's weight. Also always use a safety cable that can hold 12 times of the weight of the unit when installing the fixture.

The facility must be installed by professionals, and keep it far away from fire, walking road, and easy touched place.

2. Technical Specification

Light Source	400W LED
LED Lifetime	≥ 20000H
Power Voltage	AC100-240V ， 50-60Hz
Power Consumption	405W±5%, PF⩾0.95
Beam Angle	7°-53°
Color System	White light (Ra 95)+ CTO (linear color temperature)
Color Temperature	3200K-5800K
Control Modes	DMX512/ Auto/ Sound/ Manual/ RDM
DMX Channel	11/ 13 Channels
Protection Rating	IP20
Display	TFT 1.8" colorful reversible display, CN/EN language

Data In/Out Socket	3-pin XLR sockets
Power Socket	Power-Con in/ out
Housing Material	ABS High temperature resistant plastics
Working Temperature	-10℃ - 45℃
Pan	540° accuracy 2.11°/step, fine-tuning accuracy: 0.0034°
Tilt	250° accuracy 0.86°/step, fine-tuning accuracy: 0.0034°
Pan/Tilt Resolution	Automatically correct pan/tilt position
MAX. Connection	8 units（220V，50Hz） 2.5mm² power cable
	4 units（90V，60Hz） 2.5mm² power cable
Dimension	291*230*526mm
Net Weight	10.2kg
Carton Package	610*310*375mm 1in1 G.W.: 11kg
	645*630*415mm 2in1 G.W.: 22kg
Flight Case	820*710*740mm 4in1 G.W.: 85.1kg
Features	Full light range dimming, 65536-level dimming accuracy. fast strobe 1-25Hz. Fesnel lens, frost, CTO, strobe effects.
Configuration	Signal cable 1pc
	Power cable 1pc
	Manual 1pc

3. DMX Set Up

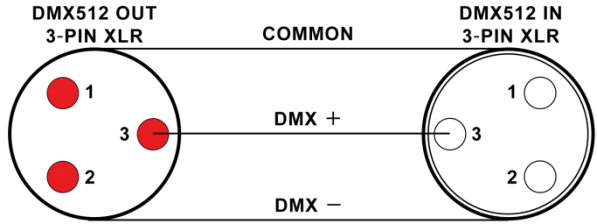

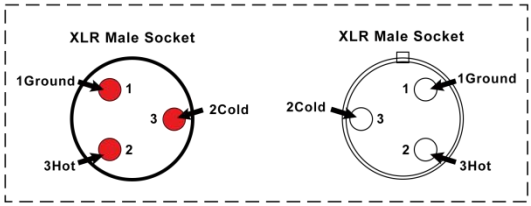

XLR Pin Configuration
pin 1=Ground
pin 2=Data Compliment (negative)
pin 3=Data true (positive)

Pin1: Ground **pin2: Negative** **pin3: Positive**

DMX Connection

To ensure optimal transmission of DMX data, please connect facilities in the shortest way. The connection order won't affect the DMX address code. For example, if the address code is set to 1, no matter where the facility is connected, its address code will not change. This is determined by the principle of the DMX controller.

Operation method

You can operate in the following three modes:

- Auto mode - the light can automatically complete all color changes
- DMX control mode - each light can be individually controlled by a standard DMX512 console
- Master mode - any light can work as a host in any of the above modes, and the other lights will work synchronously as slaves

4. Display

There are five buttons on the LED panel: ESC, UP, DOWN, ENTER and SAVE.

Display	
ESC	to exit or back to the previous menu
UP/ DOWN	to navigate through menu options or adjust values
SAVE	to save the adjusted settings/ values and back to the previous menu
ENTER	to enter next menu level.

FRONT VIEW

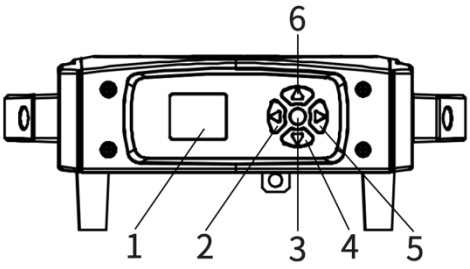

REAR VIEW

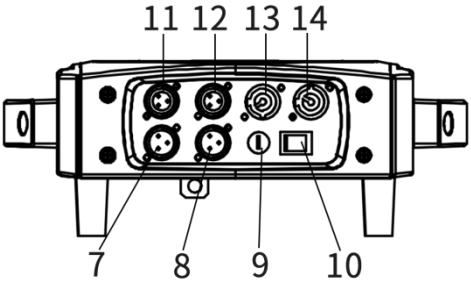

5. Menu

1-PREVIOUS-MENU 2-UP 3-DOWN 4-LOWER-MENU 5-ENTER			
First Menu	Submenu	Third Menu	Note
Menu	1. Pan Degree	1. 540 2. 360	
	2. Mic Sense	001-100	Sound sensitivity adjustment
	3. Language	1. English 2. Chinese	
	4. No Signal	1. BlackOut 2. Hold	
	5. Fan Set	1. Auto 2. Low 3. High	
	6. Reset	1. Yes	reset
		2. No	
	7. Default	1. Yes	Default setting
		2. No	
	8. Adjust	Pass Word： ****	adjust Pan/ Tilt/ Focus value to correct angle, adjust White value to correct the white balance
		1. Pan: 0-255	
		2. Tilt: 0-255	
		3. Focus: 0-255	
		4. CTO: 0-255	
		5. White: 0-255	
Addr	001-512		Address setting 001-512

Rever	1. Pan Invert	1. YES 2. NO	Forward/ reverse setting
	2. Tilt Invert	1. YES 2. NO	Forward/ reverse setting
	3. Display Invert	1. YES 2. NO	Forward/ reverse setting
Inform	1. CH Value		All channel information
	2. Soft V1.0 I2		Program Version
	3. Tem**℃）		Temperature of LED Board
Mode	1. DMX512		Control Mode setting
	2. Auto		
	3. Sound		
	4. Manual	Master/ Alone	Master/ Alone
		1. Pan: 0-255	Manual Control
		2. Tilt: 0-255	
		3. Focus: 0-255	
		4. White: 0-255	
		5. Strobe: 0-255	
		6. CTO: 0-255	
Channel	1. 11 Channels	11 channels	select working channels
	2. 13 Channels	13 channels	

6. LUX Data

BeamAngle=7°

ALL lux	892586	129000	46800	23300	11400

BeamAngle=53°

ALL lux	26700	3470	1360	688	349

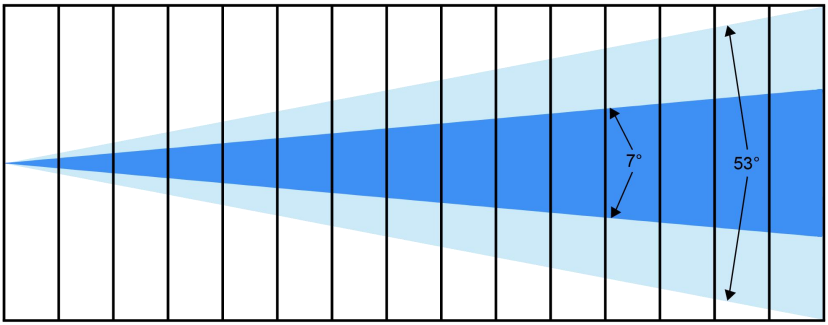

Distance(m)	1	3	5	7	10
Spot diameter(m) 7°		0.48	0.73	1.02	1.46
Spot diameter(m) 53°		2.74	4.47	6.26	8.94

7. DMX Channel List

▶ 11 CH Mode

Channel	Function	DMX Value	Description
1	Dimming	0-255	from dark to bright
2	Dimming adjustment	0-255	Dimming adjustment control
3	Strobe	0-3	Turn on the light
		4-203	Synchro strobe speed slow to fast (1Hz-25Hz)

Channel	Function	DMX Value	Description
		204-255	Random strobe
4	W	0-255	From dark to bright
5	Linear Color temperature	0-255	Cold to warm
6	Pan	0-255	Pan adjustment
7	Pan adjustment	0-255	Pan fine adjustment
8	Tilt	0-255	Tilt adjustment
9	Tilt adjustment	0-255	Pan fine adjustment
10	Zoom	0-255	From narrow to wide
11	Functions	0-149	No function
		150-159	Faster dimming (remain 3s works)
		160-169	Slow dimming (remain 3s works)
		170-250	No function
		251-255	Reset (remain 3s works)

▶ 13 CH Mode

Channel	Function	Value	Description
1	Pan	0-255	Pan adjustment
2	Pan adjustment	0-255	Pan fine adjustment
3	Tilt	0-255	Tilt adjustment
4	Pan adjustment	0-255	Pan fine adjustment
6	Zoom	0-255	From narrow to wide

Channel	Function	Value	Description
7	Dimming	0-255	From dark to bright
8	Dimming adjustment	0-255	Dimming adjustment control
9	Strobe	0-3	No function
		4-203	Strobe speed slow to fast (1Hz-25Hz)
		204-255	Random strobe
10	W	0-255	From dark to bright
11	Linear Color temperature	0-255	Cold to warm
12	Dimming curve	0-49	Linear dimming
		50-99	Square-Law dimming
		100-149	Inverse Square-Law dimming
		150-255	S curve dimming
13	Dimming mode	0-149	No function
		150-159	Faster dimming (remain 3s works)
		160-169	Slow dimming (remain 3s works)
		170-250	No function
		251-255	Reset (remain 3s works)

8. Mounting

When installing the unit, the trussing or area of installation must be able to hold 10 times the weight without any deformation. When installing the unit must be secured with a secondary safety attachment, e.g. an appropriate safety cable. Never stand directly under the facility while mounting, uninstalling or repairing facilities.

High-altitude mounting requires for extensive experience, including working load limits calculating , installation material, and periodic safety check of installation materials and facilities. If you’re lack of mentioned qualifications, do not attempt the installation yourself. These installation should be checked by a skilled person annually.

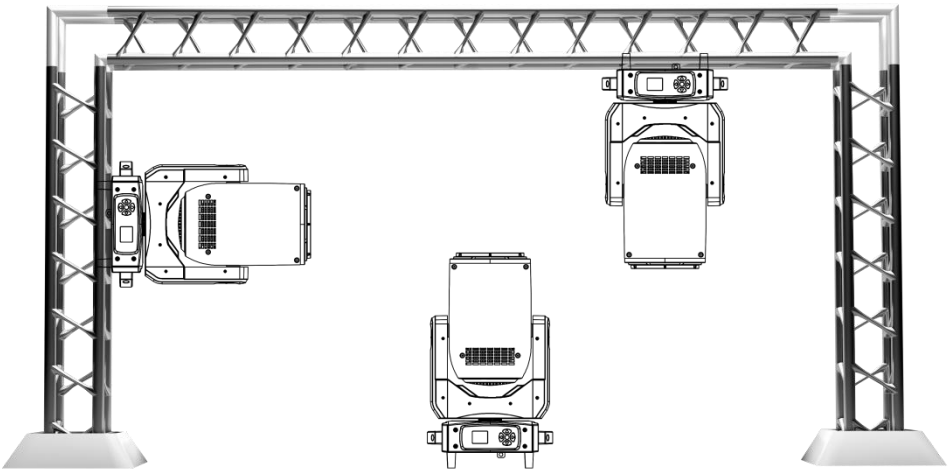

F400 works properly in above different mounting, hanging upside-down from a ceiling, sideways on trussing, or set on smooth horizontal surface. Be sure this facility is at least 1m (3.5ft) away from flammable materials (decoration etc.).

Always use and install the safety cable to prevent accidental damage or injury from the facility failure. Never use handles for secondary attachment.

NOTICE: The suitable environment temperature of the facility is from -10℃ to 45℃. Do not place this facility in an environment where the temperatures are under or above the temperatures stated. This will help the fixture run at its best and extend the lifetime.

9. Product Size

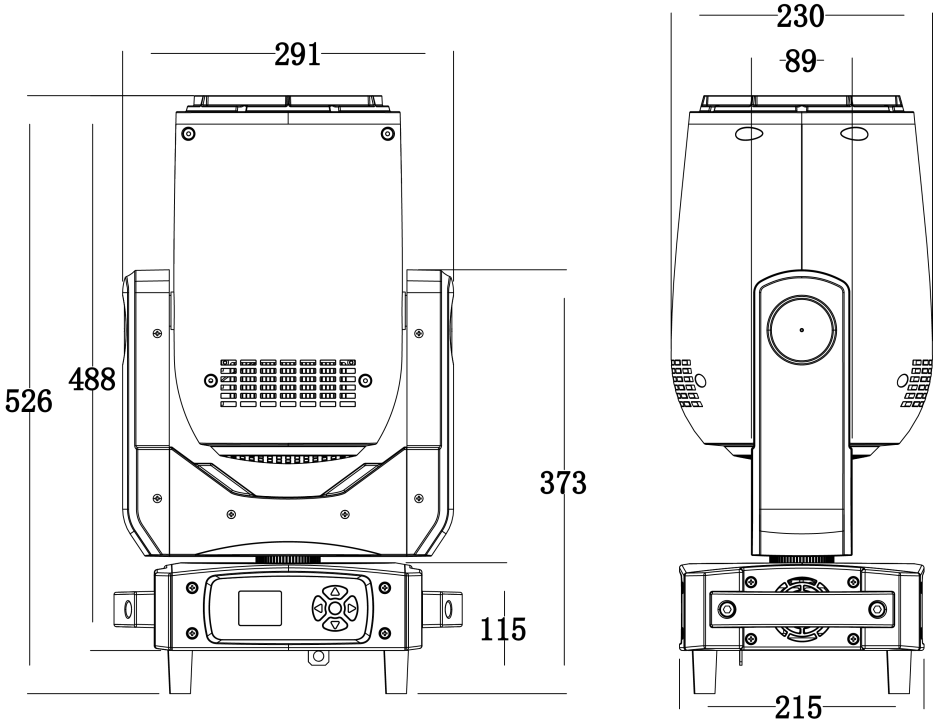

10. Attention

1. When the facility is powered on, please avoid looking directly at the facility.

2. When assembling/ replacing LED, be sure to cut off the main power of facilities before opening the cover upon the LED board.

11. Trouble Shooting

Following are a few common problems that may occur during operation. Here are some suggestions for easy troubleshooting:

A. The unit does not work, no light and the fan does not work

1. Check the status of power connection and fuse.
2. Check the voltage.
3. Check the power indicator.

B. No response to DMX controller

1. If the display screen flashes, check the DMX signal connector and signal line whether the connection is correct.
2. If the display screen does not flash, but no response to channel control, check whether the address code or channel setting is correct.
3. If the DMX signal transmission is intermittent, check if the XLR and DMX cables are in good condition.
4. Try using another controller.
5. Check if the DMX cables is too close to the high-voltage wire, which may damage or interfere with the signal circuit.
6. The facility has not completed the self-check.

C. One of the channels is not working well

1. The stepper motor might be damaged or the cable connected to the PCB is broken.
2. The motor's drive IC on the PCB might be out of condition.

12. Fixture Cleaning

The lens and diffuser should be clean frequently to get better light effect. Wipe frequency according to the environment. Humidity, excessive smoke, and dirty environment will make lens dusty.

- Use soft cloth and special glass cleaner.
- Wipe lens surface at least every 30 days.
- Use vacuum cleaners or air guns to clean the interior structure of the facility, at least twice a year.

⚠Warning:

To avoid the danger of lighting strikes and fire, please do not place the facility in a humid environment. Do not disassemble it without permission, otherwise, the manufacturer will not provide warranty. If the facility fails, please contact the manufacturer first.

Product Warranty Card

Product: 400W LED Zoom Surface Moving Light

Model NO.: F400	Manufacture Date:
User:	Purchase Date:
Manufacturer:	Sales Store:
Address:	ATTN.:
ATTN.:	Phone:
Phone:	

Note: The above blank must be filled in and sealed by the end user or sales point, otherwise no warranty will be provided. (Below please check the warranty period and terms)

Warranty Period: This facility is warranted for 2 years from the date of purchase.

Warranty Terms:

1. Except for man-made damage and natural disasters
2. If the facility fails to function properly during the warranty period, please contact our after service department or our local distributor directly.

1) Fail to present a valid warranty card.
2) Omissions, alterations, and trade sales names on the warranty card.
3) Failures and damage caused by force majeure.
4) Failures and damage caused during transportation and handling.
5) Failures and damage caused by failure to follow the instructions for use.
6) Failures and damage caused by disassembly, repair, and modification of the product without the manufacturer's authorization or by non-professionals.
7) Failures caused by the use of accessories not approved by the factory or not matched by the factory.

▲ **Thank you for reading this manual. Please keep it for future reference.**