740Z

7x40W Mini Zoom WASH

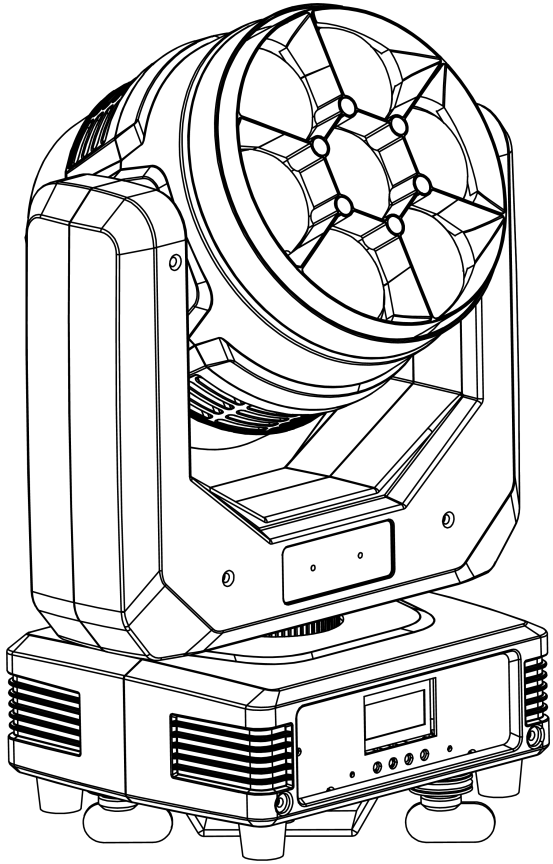

User Manual

Please read manual carefully before use

CONTENTS

1. Safety Instructions 2

2. Technical Specification 4

3. DMX Set Up 5

4. Display 6

5. Menu 7

6. LUX Data 9

7. DMX Channel List 9

8. Mounting 13

9. Product Size 14

10. Attention 15

11. Trouble Shooting 15

A. The unit does not work, no light and the fan does not work 15

B. Not responding to DMX controller 15

C. One of the channels is not working well 16

12. Fixture Cleaning 16

Thank you for choosing our LED lights. Each facility has been rigorously tested. Please check whether the facility has been damaged during transportation. If you find any parts are missing or broken, please contact the manufacturer immediately. Please do not return the product without any notice!

1.Safety Instructions

Please read this manual carefully, which includes important information on installation, use and maintenance.

Attention

- Please keep this USER MANUAL for future consultation. If you sell the facility to another user, be sure that they also receive this USER MANUAL.
- Please open and check in details and make sure there is no transportation damage.
- Before operating, ensure that the voltage and frequency of power supply match the power requirements of the facility.
- It's important to ground the yellow/green conductor to earth in order to avoid electric shock.
- The facility must be installed in a location with adequate ventilation, at least 50 cm from adjacent surfaces. Be sure that no ventilation slots are blocked.
- Make sure the power is disconnected before removing the facility.
- Make sure there are no flammable materials close to the unit while operating as it is fire hazard.
- Use safety cable when fixes this facility. Do not handle the facility by taking its head only, but always by taking its base.
- Maximum ambient temperature is 40℃. Do not operate it where the temperature is higher than this.
- Please stop using the facility for serious operating problems. Stop using the facility immediately. Never try to repair the facility by yourself, but be a professional technician. Please contact the supplier's service department

for technical support.

- Do not touch any wire during operation as high voltage might be causing electric shock.
- When the housing or lens is damaged, it must be replaced.
- Direct sunlight or any other strong light source penetrating the lens of the light will cause serious internal damage to the facility. During unpacking, installation, use and long-term outdoor idleness, it is forbidden to expose the lens of the facility to direct sunlight or any other strong light source at any angle. It is forbidden to aim the beam of one light directly at another light.

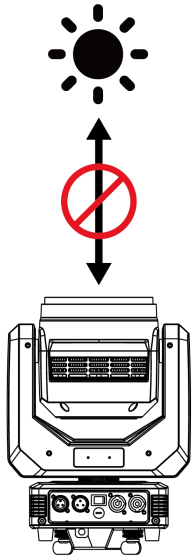

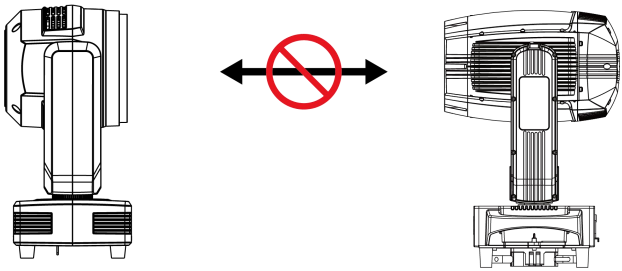

Caution

There are no accessories available, do not open the housing and try to repair the facilities yourself. Please contact our company for after service.

Installation

The unit should be mounted via its screw holes on the bracket. Always ensure that the unit is firmly fixed to avoid vibration and slipping while operating. And make sure that the structure to which you are attaching the unit is secure and is able to support a weight of 10 times of the unit's weight. Also always use a safety cable that can hold 12 times of the weight of the unit when installing the fixture.

The facility must be installed by professionals, and keep it far away from fire, walking road, and easy touched place.

2. Technical Specification

Light Source	7*40W 4 in 1 RGBW LED
LED Lifetime	≥ 50000H
Power Voltage	AC100-240V ， 50-60Hz
Power Consumption	250W
Beam Angle	3.5°-45°
Control Modes	DMX512/ Auto/ Sound/ Master-Slave/ Manual/ RDM
DMX Channel	17/ 22 Channel
Protection Rating	IP20
Display	LCD Display
Data In/Out Socket	3-pin XLR sockets
Power Socket	Power-Con in/ out
Housing Material	ABS High temperature resistant plastics
Pan	540° accuracy 2.11°/step, fine-tuning accuracy: 0.008°

Tilt	270° accuracy 0.86°/step, fine-tuning accuracy: 0.0034°
Pan/Tilt Resolution	Automatically correct pan/tilt position
MAX. Connection	8 units（240V，50Hz） 1.5mm² power cable
	4 units（100V，60Hz） 1.5mm² power cable
Dimension	258mm×178mm×343mm
Net Weight	5.2kg
Carton Package	320*240*430mm 1in1 G.W.: 6.4kg
	660*500*445mm 4in1 G.W.: 27.5kg
Flight Case	620*585*655mm 4in1 G.W.: 48.27kg
Features	Full light range dimming, 65536-level dimming accuracy. fast strobe 1-25Hz.
Configuration	Signal cable 1pc
	Power cable 1pc
	Manual 1pc

3. DMX Set Up

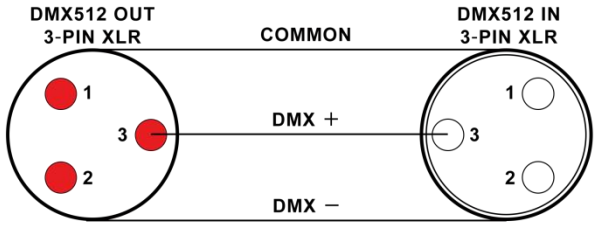

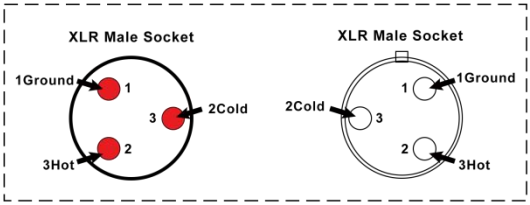

XLR Pin Configuration
pin 1=Ground
pin 2=Data Compliment (negative)
pin 3=Data true (positive)

Pin1: Ground **pin2: Negative** **pin3: Positive**

DMX Connection

To ensure optimal transmission of DMX data, please connect facilities in the shortest way. The connection order won't affect the DMX address code. For example, if the address code is set to 1, no matter where the facility is connected, its address code will not change. This is determined by the principle of the DMX controller.

Operation method

You can operate in the following three modes:

- Auto mode - the light can automatically complete all color changes
- DMX control mode - each light can be individually controlled by a standard DMX512 console
- Master mode - any light can work as a host in any of the above modes, and the other lights will work synchronously as slaves

4. Display

There are four buttons on the LED panel: MENU, UP, DOWN, and ENTER.

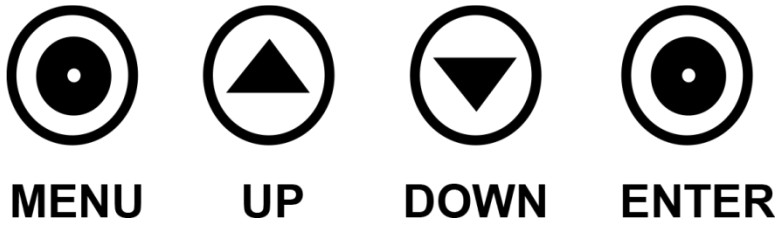

"MENU" to exit or return to the previous menu, "UP" or "DOWN" to select the upper and lower menus or adjust the values, and "ENTER" to confirm.

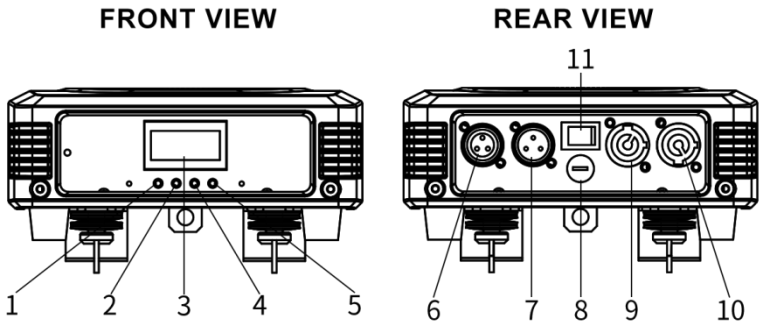

After powering on, the facility will automatically return to the last operation when it was powered off, then get into standby status. For more details, please refer to the information below↓

5. Menu

1-MENU 2-UP 3-DOWN 4-ENTER				
Menu	1.Address Set	001--512	Address code from 001-512	
	2. Mode	1. DMX 512		Select mode
		2. Auto		
		3. Sound		
		4. Manual	1. Pan: 0--255	
			2. Tilt: 0--255	
			3. Focus: 0--255	
			4. Red: 0--255	
			5. Green: 0--255	
			6. Blue: 0--255	
			7. White: 0--255	

			8. Strobe: 0--255	
	3. Channel	17 CH	17 channel	Select channel mode
		22 CH	22 channel	
	4. Invert	1. Pan Invert 1. NO 2. YES	Pan invert set	
		2. Tilt Invert 1. NO 2. YES	Tilt invert set	
	5. Sound Set	0-100	Sound sensitivity set	
	6. Pan degree	1. 540 2. 360	Pan running angle selection	
	7. No Signal	1. BlackOut 2. Hold		
	8. Fan Set	1. Auto 2. High 3. Low		
	9. Reset	1. No 2. Yes		
	10. Default	1. Yes	Factory default	
		2. No		
	11. Information	1. Soft V1.0	Software Version	
		2. Tem**℃	LED board temperature	
	12. Adjust	Pass Word:****	Change Pan/ Tilt/ Focus/ Rota value to correct the angle. Change the R/ G/ B/ W value to adjust the white balance	
		1. Pan: 0--255		
		2. Tilt: 0--255		
		3. Focus: 0--255		
		4. Red: 0--255		
		5. Green: 0--255		
		6. Blue: 0--255		
		7. White: 0--255		

6. LUX Data

BeamAngle=3.5°

R lux	27592	7818	2950	1650	761
G lux	59661	16650	6172	3194	1553
B lux	14017	3380	1245	639	313
W lux	85939	22750	8370	4319	2110
ALL lux	176410	47233	17142	8982	4390

BeamAngle=45°

R lux	3484	413	127	92	41
G lux	7965	943	364	202	99
B lux	1620	196	76	41	21
W lux	10231	1278	467	260	130
ALL lux	21422	2702	1017	545	271

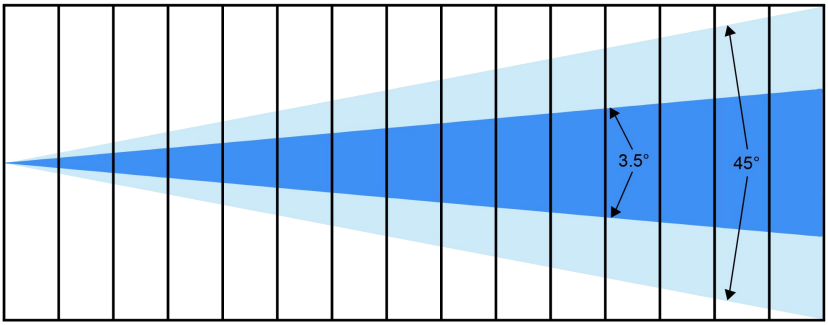

Distance(m)	1	3	5	7	10
Spot diameter(m) 3.5°		0.44	0.63	0.88	1.26
Spot diameter(m) 45°		1.92	3.09	4.32	6.18

7. DMX Channel List

▶ 17CH Mode

Channel	Function	DMX Value	Description
1	Pan	0--255	Pan adjustment
2	Pan Adjustment	0--255	Pan fine adjustment
3	Tilt	0--255	Tilt adjustment
4	Tilt Adjustment	0--255	Tilt fine adjustment

Channel	Function	DMX Value	Description
5	Pan/ Tilt Speed	0--255	From fast to slow
6	Strobe	0--15	No function
		16--214	From slow to fast
		215--255	Random strobe
7	Dimming	0--255	From dark to bright
8	Dimming Mode	0--49	Mode 1
		50--99	Mode 2
		100--149	Mode 3
		150--255	Mode 4
9	Zoom	0--255	From narrow to wide
10	R	0--255	From dark to bright
11	G	0--255	From dark to bright
12	B	0--255	From dark to bright
13	W	0--255	From dark to bright
14	Static Pattern	0--15	No function
		16--35	R 100%, G UP, B 0%
		36--55	R DOWN, G 100%, B 0%
		56--75	R 0%, G 100%, B UP
		76--95	R 0%, G DOWN, B 100%
		96--115	R UP, G 0%, B 100%
		116--135	R 100%, G 0%, B DOWN
		136--155	R 100%, G UP, B UP
		156--175	R DOWN, G DOWN, B 100%
		176--195	R 100%, G 100%, B 100%, W 100%
		196--200	2800K
		201--205	3200K
		206--210	3500K
		211--215	4000K
		216--220	4500K
		221--225	5000K
		226--230	5500K

Channel	Function	DMX Value	Description
		231--235	6000K
		236--240	6500K
		241--245	7000K
		246--250	7500K
		251--255	8000K
15	Dynamic Color	0--49	No function
		50--99	Instantaneous color change
		100--255	Color gradient
16	Dynamic Color Speed	0--255	From fast to slow
17	Reset	0--250	No function
		251--255	Reset within 5s

▶ 22CH Mode

Channel	Function	DMX Value	Description
1	Pan	0--255	Pan adjustment
2	Pan Adjustment	0--255	Pan fine adjustment
3	Tilt	0--255	Tilt adjustment
4	Tilt Adjustment	0--255	Tilt fine adjustment
5	Pan/ Tilt Speed	0--255	From fast to slow
6	Zoom	0--255	From narrow to wide
7	Dimming	0--255	Linear dimming from dark to bright
8	Dimming Adjustment	0--255	Dimming fine adjustment
9	Strobe	0--15	No function
		16--214	From slow to fast
		215--255	Random strobe
10	R	0--255	R adjustment
11	R Adjustment	0--255	R fine djustment
12	G	0--255	G adjustment
13	G Adjustment	0--255	G fine djustment
14	B	0--255	B adjustment

Channel	Function	DMX Value	Description
15	B Adjustment	0--255	B fine djustment
16	W	0--255	W adjustment
17	W Adjustment	0--255	W fine djustment
18	Dimming Mode	0--49	Mode 1
		50--99	Mode 2
		100--149	Mode 3
		150--255	Mode 4
19	Static Pattern	0--15	No function
		16--35	R 100%, G UP, B 0%
		36--55	R DOWN, G 100%, B 0%
		56--75	R 0%, G 100%, B UP
		76--95	R 0%, G DOWN, B 100%
		96--115	R UP, G 0%,B 100%
		116--135	R 100%, G 0%, B DOWN
		136--155	R 100%, G UP, B UP
		156--175	R DOWN, G DOWN, B 100%
		176--195	R 100%, G 100%, B 100%, W 100%
		196--200	2800K
		201--205	3200K
		206--210	3500K
		211--215	4000K
		216--220	4500K
		221--225	5000K
		226--230	5500K
		231--235	6000K
		236--240	6500K
		241--245	7000K
		246--250	7500K
		251--255	8000K
20	Dynamic Color	0--49	No function
		50--99	Instantaneous color change

Channel	Function	DMX Value	Description
		100--255	Color gradient
21	Dynamic Color Speed	0--255	From fast to slow
22	Reset	0--250	No function
		251--255	Reset within 5s

8. Mounting

When installing the unit, the trussing or area of installation must be able to hold 10 times the weight without any deformation. When installing the unit must be secured with a secondary safety attachment, e.g. an appropriate safety cable. Never stand directly under the facility while mounting, uninstalling or repairing facilities.

High-altitude mounting requires for extensive experience, including working load limits calculating , installation material, and periodic safety check of installation materials and facilities. If you’re lack of mentioned qualifications, do not attempt the installation yourself. These installation should be checked by a skilled person annually.

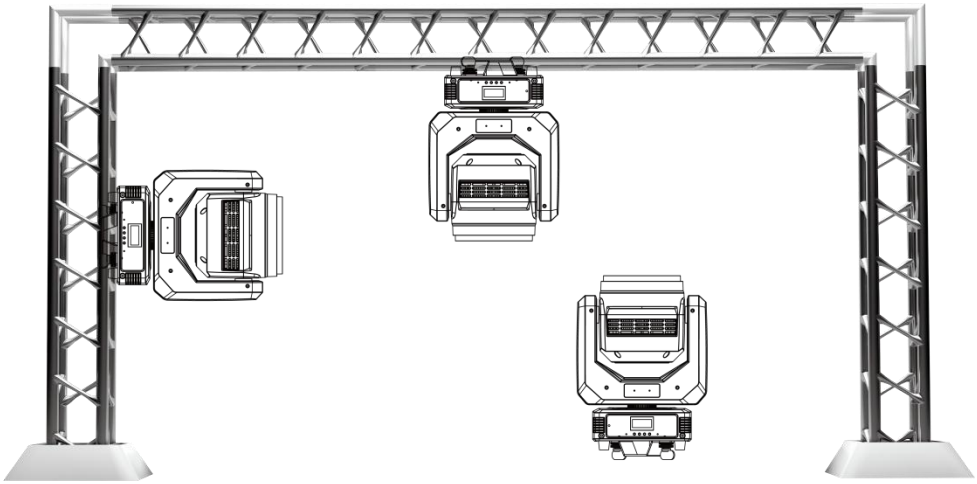

740Z works properly in above different mounting, hanging upside-down from a ceiling, sideways on trussing, or set on smooth horizontal surface. Be sure this facility is at least 1m (3.5ft) away from flammable materials (decoration etc.). Always use and install the safety cable to prevent accidental damage or injury from the facility failure. Never use handles for secondary attachment.

NOTICE: The suitable environment temperature of the facility is from -10℃ to 45℃. Do not place this facility in an environment where the temperatures are under or above the temperatures stated. This will help the fixture run at its best and extend the lifetime.

9. Product Size

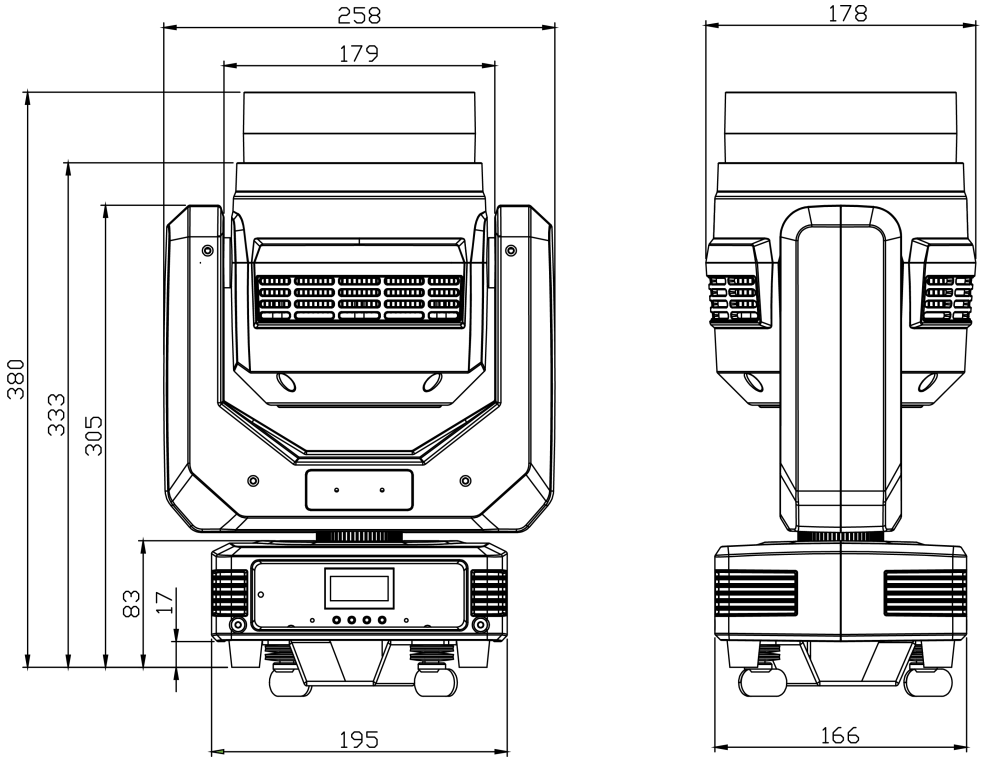

10. Attention

1. When the facility is powered on, please avoid looking directly at the facility.

2. When assembling/ replacing LED, be sure to cut off the main power of facilities before opening the cover upon the LED board.

11. Trouble Shooting

Following are a few common problems that may occur during operation. Here are some suggestions for easy troubleshooting:

A. The unit does not work, no light and the fan does not work

1. Check the status of power connection and fuse.
2. Check the voltage.
3. Check the power indicator.

B. No response to DMX controller

1. If the display screen flashes, check the DMX signal connector and signal line whether the connection is correct.
2. If the display screen does not flash, but no response to channel control, check whether the address code or channel setting is correct.
3. If the DMX signal transmission is intermittent, check if the XLR and DMX cables are in good condition.
4. Try using another controller.
5. Check if the DMX cables is too close to the high-voltage wire, which may damage or interfere with the signal circuit.
6. The facility has not completed the self-check.

C. One of the channels is not working well

1. The stepper motor might be damaged or the cable connected to the PCB is broken.
2. The motor's drive IC on the PCB might be out of condition.

12. Fixture Cleaning

The lens and diffuser should be clean frequently to get better light effect. Wipe frequency according to the environment. Humidity, excessive smoke, and dirty environment will make lens dusty.

- Use soft cloth and special glass cleaner.
- Wipe lens surface at least every 30 days.
- Use vacuum cleaners or air guns to clean the interior structure of the facility, at least twice a year.

⚠Warning:

To avoid the danger of lighting strikes and fire, please do not place the facility in a humid environment. Do not disassemble it without permission, otherwise, the manufacturer will not provide warranty. If the facility fails, please contact the manufacturer first.

Product Warranty Card

Product: 7x40W Zoom WASH

Model NO.: 740Z	Manufacture Date:
User:	Purchase Date:
Manufacturer:	Sales Store:
Address:	ATTN.:
ATTN.:	Phone:
Phone:	

Note: The above blank must be filled in and sealed by the end user or sales point, otherwise no warranty will be provided. (Below please check the warranty period and terms)

Warranty Period: This facility is warranted for 2 years from the date of purchase.

Warranty Terms:

1. Except for man-made damage and natural disasters
2. If the facility fails to function properly during the warranty period, please contact our after service department or our local distributor directly.

1) Fail to present a valid warranty card.
2) Omissions, alterations, and trade sales names on the warranty card.
3) Failures and damage caused by force majeure.
4) Failures and damage caused during transportation and handling.
5) Failures and damage caused by failure to follow the instructions for use.
6) Failures and damage caused by disassembly, repair, and modification of the product without the manufacturer's authorization or by non-professionals.
7) Failures caused by the use of accessories not approved by the factory or not matched by the factory.

▲ **Thank you for reading this manual. Please keep it for future reference.**