1960Z-7

19×60W RGBLACP Wash Zoom

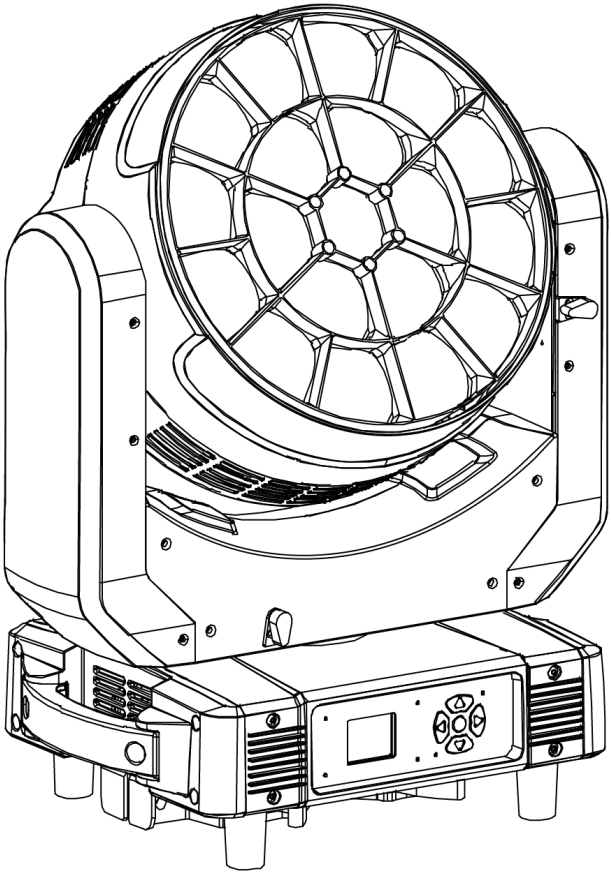

User Manual

Please read this manual carefully before use

CONTENTS

1. Safety Instructions 2

2. Technical Specification 4

3. DMX Set Up 5

4. Display 7

5. Menu 8

6. LUX Data 11

7. DMX Channel List 12

8. Mounting 32

9. Product Size 33

10. Attention 34

11. Trouble Shooting 34

A. The unit does not work, no light and the fan does not work 34

B. Not responding to DMX controller 34

C. One of the channels is not working well 35

12. Fixture Cleaning 35

Thank you for choosing our LED lights. Each facility has been rigorously tested. Please check whether the facility has been damaged during transportation. If you find any parts are missing or broken, please contact the manufacturer immediately. Please do not return the product without any notice!

1.Safety Instructions

Please read this manual carefully, which includes important information on installation, use and maintenance.

Attention

- Please keep this USER MANUAL for future consultation. If you sell the facility to another user, be sure that they also receive this USER MANUAL.
- Please open and check in details and make sure there is no transportation damage.
- Before operating, ensure that the voltage and frequency of power supply match the power requirements of the facility.
- It's important to ground the yellow/green conductor to earth in order to avoid electric shock.
- The facility must be installed in a location with adequate ventilation, at least 50 cm from adjacent surfaces. Be sure that no ventilation slots are blocked.
- Make sure the power is disconnected before removing the facility.
- Make sure there are no flammable materials close to the unit while operating as it is fire hazard.
- Use safety cable when fixes this facility. Do not handle the facility by taking its head only, but always by taking its base.
- Maximum ambient temperature is 40℃. Do not operate it where the temperature is higher than this.
- Please stop using the facility for serious operating problems. Stop using the facility immediately. Never try to repair the facility by yourself, but be a professional technician. Please contact the supplier's service department

for technical support.

- Do not touch any wire during operation as high voltage might be causing electric shock.
- When the housing or lens is damaged, it must be replaced.
- Direct sunlight or any other strong light source penetrating the lens of the light will cause serious internal damage to the facility. During unpacking, installation, use and long-term outdoor idleness, it is forbidden to expose the lens of the facility to direct sunlight or any other strong light source at any angle. It is forbidden to aim the beam of one light directly at another light.

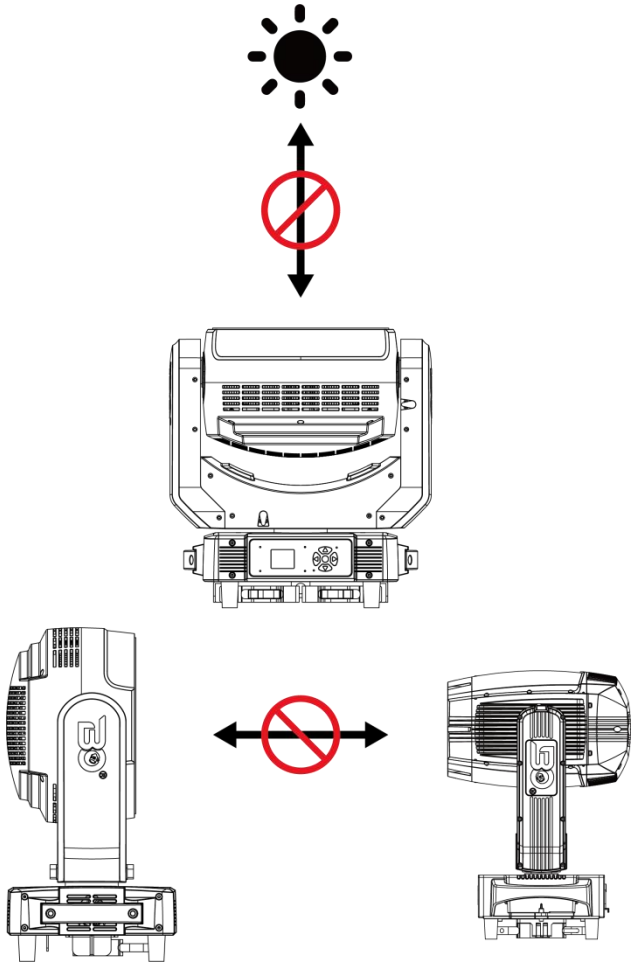

Caution

There are no accessories available, do not open the housing and try to repair the facilities yourself. Please contact our company for after service.

Installation

The unit should be mounted via its screw holes on the bracket. Always ensure that the unit is firmly fixed to avoid vibration and slipping while operating. And make sure that the structure to which you are attaching the unit is secure and is able to support a weight of 10 times of the unit's weight. Also always use a safety cable that can hold 12 times of the weight of the unit when installing the fixture.

The facility must be installed by professionals, and keep it far away from fire, walking road, and easy touched place.

2. Technical Specification

Light Source	19 x 60W 7in1 RGBLACP LED
LED Lifetime	≥ 50000H
Power Voltage	AC100-240V ，50-60Hz
Power Consumption	950W±5%，Power factor PF ⩾ 0.95
Beam Angle	4.5°~43°；Glass light guider + PMMA high quality optical lens
Control Modes	DMX512/ Auto/ Sound/ Master/ Manual/ RDM/ ArtNet(optional)
DMX Channel	20/ 28/ 30/ 38/ 39/ 11+21 Channel
Protection Rating	IP20
Display	1.8" TFT Color Display, 180° reversible, quick swtching in Chinese and English
Data In/Out Socket	3-pin XLR sockets
Power Socket	Power-Con in/ out

Housing Material	ABS High temperature resistant plastics
Pan	540°accuracy 2.11°/step, fine-tuning accuracy: 0.008°
Tilt	270°accuracy 0.86°/step, fine-tuning accuracy: 0.0034°
Pan/Tilt Resolution	Automatically correct pan/tilt position
MAX. Connection	4 units（230V，50Hz） 2.5mm² power cable
	2 units（110V，60Hz） 2.5mm² power cable
Dimension	421*315*448mm
Net Weight	21.2kg
Carton Package	550*415*530mm 1in1 GW: 24.35 kg
Flight Case	865*480*770mm 2in1 GW: 75.1 kg
Features	Full range dimming, 65536 dimming levels; 4 dimming curves to choose. Fast strobe 1~25Hz; LED are divided into 3 circles for control;Integrating WASH and beam effect; Preset multiple color macro function; Preset multiple effect macro function; CTO: 2200K--10000K selection
Configuration	Signal cable 1pc
	Power cable 1pc
	Manual 1pc

3. DMX Set Up

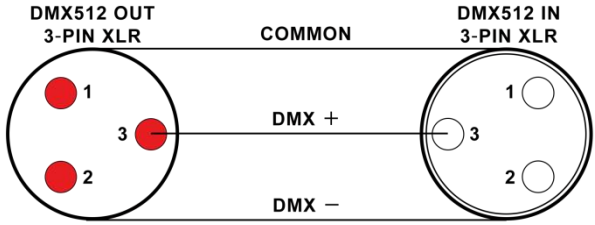

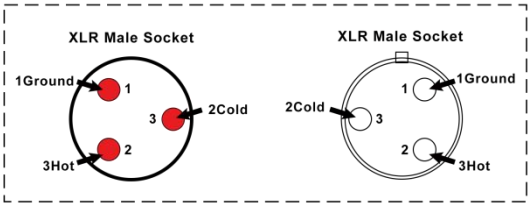

XLR Pin Configuration
pin 1=Ground
pin 2=Data Compliment (negative)
pin 3=Data true (positive)

Pin1: Ground **pin2: Negative** **pin3: Positive**

DMX Connection

To ensure optimal transmission of DMX data, please connect facilities in the shortest way. The connection order won't affect the DMX address code. For example, if the address code is set to 1, no matter where the facility is connected, its address code will not change. This is determined by the principle of the DMX controller.

Operation method

You can operate in the following three modes:

- Auto mode - the light can automatically complete all color changes
- DMX control mode - each light can be individually controlled by a standard DMX512 console
- Master mode - any light can work as a host in any of the above modes, and the other lights will work synchronously as slaves

4. Display

There are five buttons on the LED panel: ESC, UP, DOWN, ENTER and SAVE.

Display	
ESC	to exit or back to the previous menu
UP/ DOWN	to navigate through menu options or adjust values
SAVE	to save the adjusted settings/ values and back to the previous menu
ENTER	to enter next menu level.

FRONT VIEW

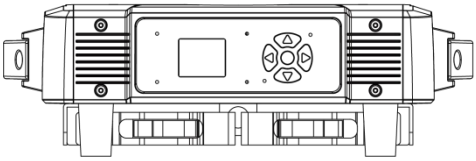

REAR VIEW

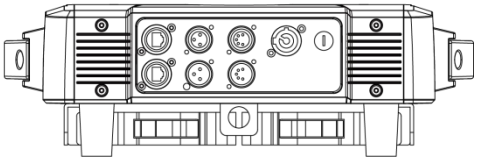

After powering on, the facility will automatically return to the last operation when it was powered off, then get into standby status. For more details, please refer to the information below↓

5. Menu

1 previous-MENU 2 UP 3 DOWN 4 Lower-MENU 5 ENTER			
Menu	1.Pan Degree	1.540 2.360	Pan running angle selection
	2.Mic Sense	001-100	Sound sensitivity
	3.Language	1.English 2.Chinese	Choose language
	4.No Signal	1.BlackOut 2.Hold	
	5.Fan Set	1.Auto 2.Low 3.High	
	6.ArtNet Set	1.ArtNet Enable：1.ON 2.OFF	ArtNet function
		2.Universe:0-255	
		3. Mode：A.2.X.X.XAuto B.10.X.X.XAuto C.Custom	
		4.Custom IP:192.168.000.001	
		5.SubNetMask：255.000.000.000	
	7.Reset	1.Yes	Reset
		2.No	
	8.Default	1.Yes	Factory setting
		2.No	
	9.Adjust	Pass Word：****	Change the value of Pan/Tilt/Focus to correct the angle; change the value of R/G/B/W to adjust the white balance.
		1.Pan: 0-255	
		2.Tilt: 0-255	
		3.Focus: 0-255	

		4.Red1: 0-255	
		5.Green1: 0-255	
		6.Blue1: 0-255	
		7.Lemon: 0-255	
		8.Amber: 0-255	
		9.Cyan: 0-255	
		10.Purple: 0-255	
Addr	001-512		Setting the address from 001-512
Rever	1.Pan Invert	1.YES 2.NO	Pan clockwise and counterclockwise setting
	2.Tilt Invert	1.YES 2.NO	Tilt clockwise and counterclockwise setting
	3.Display Invert	1.YES 2.NO	Display counterclockwise setting
Inform	1.CH Value		Shown all channel information
	2.Tem**℃		Show the temperature of LED board
	3.Version:****		Program version number
	4.IP address:****		ArtNet function
	5.Mask:****		ArtNet function
	6.Use Time****		
	7.Clear Time		
Mode	1.DMX512		Setting control mode

	2.Auto		
	3.Sound		
	4.Manual	Master/Alone	Master/Alone
		1.Pan: 0-255	Manual control
		2.Tilt: 0-255	
		3.Focus: 0-255	
		4.Red1: 0-255	
		5.Green1: 0-255	
		6.Blue1: 0-255	
		7.Lemon1: 0-255	
		8.Amber: 0-255	
		9.Cyan: 0-255	
		10.Purple: 0-255	
		11.Strobe1: 0-255	
Channel	20 CH	20 Channel	Select channel mode
	28 CH	28 Channel	
	30 CH	30 Channel	
	38 CH	38 Channel	

	39 CH	39 Channel	
	21 CH(ArtNet)	21 Channel(ArtNet)	

6. LUX Data

BeamAngle=4.5°

R lux	9430	6460	4070	2230	1110
G lux	20500	13800	8420	4370	2320
B lux	3590	2440	1470	823	401
L lux	23600	15700	9460	5370	2640
A lux	13400	9730	5850	3290	1620
C lux	10800	7040	4410	2480	1210
P lux	72	46	31	17	8.5
ALL lux	77600	52900	31400	17400	8650

BeamAngle=43°

R lux	5010	737	280	145	71.3
G lux	10800	1630	624	326	159
B lux	1900	279	106	55	27
L lux	12200	1800	675	355	174
A lux	7500	1090	407	217	107
C lux	5860	862	322	170	84
P lux	38.4	6.1	2.1	0.6	0.2
ALL lux	39800	6070	2260	1190	590

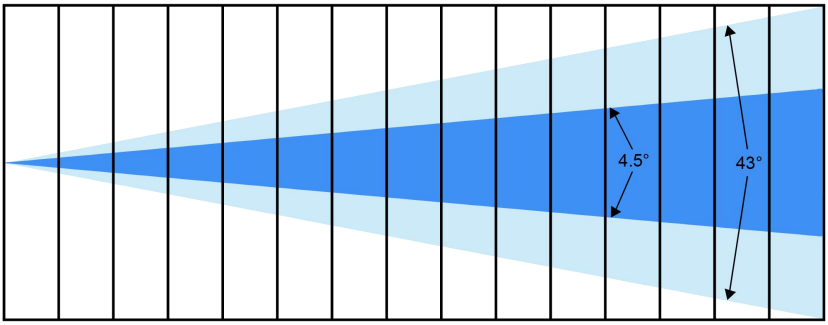

Distance(m)	1	3	5	7	10
Spot diameter(m) 4.5°		0.63	0.86	1.20	1.72
Spot diameter(m) 43°		1.92	3.12	4.37	6.24

7. DMX Channel List

▶ 20CH Mode

CH	Function	DMX Value	Description
1	Pan	0-255	Pan adjustment
2	Pan adjustment	0-255	Pan fine adjustment
3	Tilt	0-255	Tilt adjustment
4	Tilt adjustment	0-255	Tilt fine adjustment
5	Pan/Tilt speed	0-255	From fast to slow
6	Zoom	0-255	From narrow to wide
7	Dimmer	0-255	From dark to bright
8	Dimmer adjustment	0-255	From dark to bright
9	Strobe	0-3	Strobe dimming
		4-203	Synchronous strobe speed from slow to fast (1Hz-25Hz)
		204-255	Random strobe
10	R dimming	0-255	From dark to bright
11	G dimming	0-255	From dark to bright
12	B dimming	0-255	From dark to bright
13	L dimming	0-255	From dark to bright
14	A dimming	0-255	From dark to bright
15	C dimming	0-255	From dark to bright

CH	Function	DMX Value	Description
16	P dimming	0-255	From dark to bright
17	Color temperature	0-7	No function
		8-25	R100%, G UP, B0%
		26-43	R DOWN, G100%, B0%
		44-61	R0%, G100%, B UP
		62-79	R0%, G DOWN, B100%
		80-97	R UP, G0%, B100%
		98-115	R100%, G0%, B DOWN
		116-133	R100%, G UP, B UP
		134-152	R DOWN, G DOWN, B100%
		152-170	R 100%, G 100%, B100%, W100%
		171-175	2300K
		176-180	2800K
		181-185	3200K
		186-190	3700K
		191-195	4000K
		196-200	4500K
		201-205	5000K
		206-210	5500K

CH	Function	DMX Value	Description
		211-215	6000K
		216-220	6500K
		221-225	7000K
		226-230	7500K
		231-235	8000K
		236-240	8500K
		241-245	9000K
		246-250	9500K
		251-255	10000K
18	Pattern	0-9	No function
		10-19	Static pattern 1
		20-29	Static pattern 2
		..... (10 numbers and 1 pattern）	.....
		60-69	Static pattern 6
		70-79	Dynamic pattern 1
		80-89	Dynamic pattern 2
		..... (10 numbers and 1 pattern）	.....
		190-199	Dynamic pattern 13
		200-255	Dynamic pattern 14

CH	Function	DMX Value	Description
19	Dynamic pattern speed （With 18 CH）	0-127	Clockwise, from fast to slow
		128-255	Counterclockwise, from slow to fast
20	Reset	0-137	No function
		138-149	PWM output frequency 1K-64K (stay for 3s) 1K,2K,4K,6K,8K,10K,16K,20K, 24K,32K,48K,64K
		150-159	Fast dimming
		160-169	Slow dimming(from fast to slow)
		170-250	No function
		251-255	Light reset (stay for 3s)

▶ 28CH Mode

CH	Function	DMX Value	Description
1	Pan	0-255	Pan adjustment
2	Pan adjustment	0-255	Pan fine adjustment
3	Tilt	0-255	Tilt adjustment
4	Tilt adjustment	0-255	Tilt fine adjustment
5	Pan/Tilt speed	0-255	From fast to slow
6	Zoom	0-255	From narrow to wide
7	Dimmer	0-255	From dark to bright
8	Dimmer adjustment	0-255	From dark to bright

CH	Function	DMX Value	Description
9	Strobe	0-3	Strobe dimming
		4-203	Synchronous strobe speed from slow to fast (1Hz-25Hz)
		204-255	Random strobe
10	R dimming	0-255	From dark to bright
11	G dimming	0-255	From dark to bright
12	B dimming	0-255	From dark to bright
13	L dimming	0-255	From dark to bright
14	A dimming	0-255	From dark to bright
15	C dimming	0-255	From dark to bright
16	P dimming	0-255	From dark to bright
17	Color temperature	0-7	No function
		8-25	R100%, G UP, B0%
		26-43	R DOWN, G100%, B0%
		44-61	R0%, G100%, B UP
		62-79	R0%, G DOWN, B100%
		80-97	R UP, G0%, B100%
		98-115	R100%, G0%, B DOWN
		116-133	R100%, G UP, B UP
		134-152	R DOWN, G DOWN, B100%

CH	Function	DMX Value	Description
		152-170	R 100%, G 100%, B100%, W100%
		171-175	2300K
		176-180	2800K
		181-185	3200K
		186-190	3700K
		191-195	4000K
		196-200	4500K
		201-205	5000K
		206-210	5500K
		211-215	6000K
		216-220	6500K
		221-225	7000K
		226-230	7500K
		231-235	8000K
		236-240	8500K
		241-245	9000K
		246-250	9500K
		251-255	10000K
18	Macro color	0-9	No function

CH	Function	DMX Value	Description
		10-19	Macro color 1
		20-29	Macro color 2
		..... (10 numbers and 1 macro color)	.....
		190-199	Macro color 19
		200-255	Macro color 20
19	Pattern	0-9	No function
		10-19	Static pattern 1
		20-29	Static pattern 2
		..... (10 numbers and 1 pattern）	.....
		60-69	Static pattern 6
		70-79	Dynamic pattern 1
		80-89	Dynamic pattern 2
		..... (10 numbers and 1 pattern）	.....
		190-199	Dynamic pattern 13
		200-255	Dynamic pattern 14
20	Dynamic pattern speed （With 19 CH）	0-127	Clockwise, from fast to slow
		128-255	Counterclockwise, from slow to fast
21	Background R	0-255	Pattern effect red
22	Background G	0-255	Pattern effect green

CH	Function	DMX Value	Description
23	Background B	0-255	Pattern effect blue
24	Background L	0-255	Pattern effect lemon
25	Background A	0-255	Pattern effect amber
26	Background C	0-255	Pattern effect cyan
27	Background P	0-255	Pattern effect purple
28	Function	0-137	No function
		138-149	PWM output frequency 1K-64K (stay for 3s) 1K,2K,4K,6K,8K,10K,16K,20K, 24K,32K,48K,64K
		150-159	Fast dimming
		160-169	Slow dimming(from fast to slow)
		170-250	No function
		251-255	Light reset (stay for 3s)

▶ 30CH Mode

CH	Function	DMX Value	Description
1	Pan	0-255	Pan adjustment
2	Pan adjustment	0-255	Pan fine adjustment
3	Tilt	0-255	Tilt adjustment
4	Tilt adjustment	0-255	Tilt fine adjustment
5	Pan/Tilt speed	0-255	From fast to slow

CH	Function	DMX Value	Description
6	Zoom	0-255	From narrow to wide
7	Function	0-137	No function
		138-149	PWM output frequency 1K-64K (stay for 3s) 1K,2K,4K,6K,8K,10K,16K,20K, 24K,32K,48K,64K
		150-159	Fast dimming
		160-169	Slow dimming(from fast to slow)
		170-250	No function
		251-255	Light reset (stay for 3s)
8	Dimmer	0-255	From dark to bright
9	Strobe	0-3	Strobe dimming
		4-203	Synchronous strobe speed from slow to fast (1Hz-25Hz)
		204-255	Random strobe
10	R1 LED dimming	0-255	R1 LED dimming
11	G1 LED dimming	0-255	G1 LED dimming
12	B1 LED dimming	0-255	B1 LED dimming
13	L1 LED dimming	0-255	L1 LED dimming
14	A1 LED dimming	0-255	A1 LED dimming
15	C1 LED dimming	0-255	C1 LED dimming
16	P1 LED dimming	0-255	P1 LED dimming
17	R2 LED dimming	0-255	R2 LED dimming

CH	Function	DMX Value	Description
18	G2 LED dimming	0-255	G2 LED dimming
19	B2 LED dimming	0-255	B2 LED dimming
20	L2 LED dimming	0-255	L2 LED dimming
21	A2 LED dimming	0-255	A2 LED dimming
22	C2 LED dimming	0-255	C2 LED dimming
23	P2 LED dimming	0-255	P2 LED dimming
24	R3 LED dimming	0-255	R3 LED dimming
25	G3 LED dimming	0-255	G3 LED dimming
26	B3 LED dimming	0-255	B3 LED dimming
27	L3 LED dimming	0-255	L3 LED dimming
28	A3 LED dimming	0-255	A3 LED dimming
29	C3 LED dimming	0-255	C3 LED dimming
30	P3 LED dimming	0-255	P3 LED dimming

▶ 38CH Mode

CH	Function	DMX Value	Description
1	Pan	0-255	Pan adjustment
2	Pan adjustment	0-255	Pan fine adjustment
3	Tilt	0-255	Tilt adjustment
4	Tilt adjustment	0-255	Tilt fine adjustment

CH	Function	DMX Value	Description
5	Pan/Tilt speed	0-255	From fast to slow
6	Zoom	0-255	From narrow to wide
7	Function	0-137	No function
		138-149	PWM output frequency 1K-64K (stay for 3s) 1K,2K,4K,6K,8K,10K,16K,20K, 24K,32K,48K,64K
		150-159	Fast dimming
		160-169	Slow dimming(from fast to slow)
		170-250	No function
		251-255	Light reset (stay for 3s)
8	Dimmer	0-255	From dark to bright
9	Dimmer adjust	0-255	Dimmer adjustment control
10	Strobe	0-3	Strobe dimming
		4-203	Synchronous strobe speed from slow to fast (1Hz-25Hz)
		204-255	Random strobe
11	R dimming	0-255	From dark to bright
12	G dimming	0-255	From dark to bright
13	B dimming	0-255	From dark to bright
14	L dimming	0-255	From dark to bright
15	A dimming	0-255	From dark to bright
16	C dimming	0-255	From dark to bright

CH	Function	DMX Value	Description
17	P dimming	0-255	From dark to bright
18	R1 LED dimming	0-255	R1 LED dimming
19	G1 LED dimming	0-255	G1 LED dimming
20	B1 LED dimming	0-255	B1 LED dimming
21	L1 LED dimming	0-255	L1 LED dimming
22	A1 LED dimming	0-255	A1 LED dimming
23	C1 LED dimming	0-255	C1 LED dimming
24	P1 LED dimming	0-255	P1 LED dimming
25	R2 LED dimming	0-255	R2 LED dimming
26	G2 LED dimming	0-255	G2 LED dimming
27	B2 LED dimming	0-255	B2 LED dimming
28	L2 LED dimming	0-255	L2 LED dimming
29	A2 LED dimming	0-255	A2 LED dimming
30	C2 LED dimming	0-255	C2 LED dimming
31	P2 LED dimming	0-255	P2 LED dimming
32	R3 LED dimming	0-255	R3 LED dimming
33	G3 LED dimming	0-255	G3 LED dimming
34	B3 LED dimming	0-255	B3 LED dimming
35	L3 LED dimming	0-255	L3 LED dimming

CH	Function	DMX Value	Description
36	A3 LED dimming	0-255	A3 LED dimming
37	C3 LED dimming	0-255	C3 LED dimming
38	P3 LED dimming	0-255	P3 LED dimming

▶ 39CH Mode

CH	Function	DMX Value	Description
1	Pan	0-255	Pan adjustment
2	Pan adjustment	0-255	Pan fine adjustment
3	Tilt	0-255	Tilt adjustment
4	Tilt adjustment	0-255	Tilt fine adjustment
5	Pan/Tilt speed	0-255	From fast to slow
6	Zoom	0-255	From narrow to wide
7	Dimming curve	0-49	Linear dimming
		50-99	Square-Law dimming
		100-149	Inverse Square-Law dimming
		150-255	S-curve dimming
8	Dimmer	0-255	From dark to bright
9	Dimmer adjust	0-255	Dimmer adjustment control
10	Strobe	0-3	Strobe dimming
		4-203	Synchronous strobe speed from slow to fast (1Hz-25Hz)

CH	Function	DMX Value	Description
		204-255	Random strobe
11	R	0-255	Red dimming
12	Red adjust	0-255	Red adjust
13	G	0-255	Green dimming
14	Green adjust	0-255	Green adjust
15	B	0-255	Blue dimming
16	Blue adjust	0-255	Blue adjust
17	L	0-255	lemon dimming
18	lemon adjust	0-255	lemon adjust
19	A	0-255	Amber dimming
20	Amber adjust	0-255	Amber adjust
21	C	0-255	Cyan dimming
22	Cyan adjust	0-255	Cyan adjust
23	P	0-255	Purple dimming
24	Purple adjust	0-255	Purple adjust
25	Color temperature	0-7	No function
		8-25	R100%, G UP, B0%
		26-43	R DOWN, G100%, B0%
		44-61	R0%, G100%, B UP

CH	Function	DMX Value	Description
		62-79	R0%, G DOWN, B100%
		80-97	R UP, G0%, B100%
		98-115	R100%, G0%, B DOWN
		116-133	R100%, G UP, B UP
		134-152	R DOWN, G DOWN, B100%
		152-170	R 100%, G 100%, B100%, W100%
		171-175	2300K
		176-180	2800K
		181-185	3200K
		186-190	3700K
		191-195	4000K
		196-200	4500K
		201-205	5000K
		206-210	5500K
		211-215	6000K
		216-220	6500K
		221-225	7000K
		226-230	7500K
		231-235	8000K

CH	Function	DMX Value	Description
		236-240	8500K
		241-245	9000K
		246-250	9500K
		251-255	10000K
26	Macro color	0-9	No function
		10-19	Macro color 1
		20-29	Macro color 2
		..... (10 numbers and 1 macro color)	.....
		190-199	Macro color 19
		200-255	Macro color 20
27	Pattern	0-9	No function
		10-19	Static pattern 1
		20-29	Static pattern 2
		..... (10 numbers and 1 pattern）	.....
		60-69	Static pattern 6
		70-79	Dynamic pattern 1
		80-89	Dynamic pattern 2
		..... (10 numbers and 1 pattern）	.....

CH	Function	DMX Value	Description
		190-199	Dynamic pattern 13
		200-255	Dynamic pattern 14
28	Dynamic pattern speed（With 19 CH）	0-127	Clockwise, from fast to slow
		128-255	Counterclockwise, from slow to fast
29	Pattern fade	0-255	Pattern effect fade
30	Background dimming	0-255	Background 0~100% dimming
31	Background strobe	0-255	Background strobe
32	Background R	0-255	Pattern effect red
33	Background G	0-255	Pattern effect green
34	Background B	0-255	Pattern effect blue
35	Background L	0-255	Pattern effect lemon
36	Background A	0-255	Pattern effect amber
37	Background C	0-255	Pattern effect cyan
38	Background P	0-255	Pattern effect purple
39	Function	0-137	No function
		138-149	PWM output frequency 1K-64K (stay for 3s) 1K,2K,4K,6K,8K,10K,16K,20K, 24K,32K,48K,64K
		150-159	Fast dimming
		160-169	Slow dimming(from fast to slow)
		170-250	No function

CH	Function	DMX Value	Description
		251-255	Light reset (stay for 3s)

▶ 21CH Mode

CH	Function	DMX Value	Description
1	Pan	0-255	Pan adjustment
2	Pan adjustment	0-255	Pan fine adjustment
3	Tilt	0-255	Tilt adjustment
4	Tilt adjustment	0-255	Tilt fine adjustment
5	Pan/Tilt speed	0-255	From fast to slow
6	Zoom	0-255	From narrow to wide
7	Function	0-137	No function
		138-149	PWM output frequency 1K-64K (stay for 3s) 1K,2K,4K,6K,8K,10K,16K,20K, 24K,32K,48K,64K
		150-159	Fast dimming
		160-169	Slow dimming(from fast to slow)
		170-250	No function
		251-255	Light reset (stay for 3s)
8	Dimming curve	0-49	Linear dimming
		50-99	Square-Law dimming
		100-149	Inverse Square-Law dimming

CH	Function	DMX Value	Description
		150-255	S-curve dimming
9	Dimmer	0-255	From dark to bright
10	Dimmer adjust	0-255	Dimmer adjustment control
11	Strobe	0-3	Strobe dimming
		4-203	Synchronous strobe speed from slow to fast (1Hz-25Hz)
		204-255	Random strobe
ArtNet Control			
1	R1 LED dimming	0-255	R1 LED dimming
2	G1 LED dimming	0-255	G1 LED dimming
3	B1 LED dimming	0-255	B1 LED dimming
4	L1 LED dimming	0-255	L1 LED dimming
5	A1 LED dimming	0-255	A1 LED dimming
6	C1 LED dimming	0-255	C1 LED dimming
7	P1 LED dimming	0-255	P1 LED dimming
8	R2 LED dimming	0-255	R2 LED dimming
9	G2 LED dimming	0-255	G2 LED dimming
10	B2 LED dimming	0-255	B2 LED dimming
11	L2 LED dimming	0-255	L2 LED dimming
12	A2 LED dimming	0-255	A2 LED dimming

CH	Function	DMX Value	Description
13	C2 LED dimming	0-255	C2 LED dimming
14	P2 LED dimming	0-255	P2 LED dimming
15	R3 LED dimming	0-255	R3 LED dimming
16	G3 LED dimming	0-255	G3 LED dimming
17	B3 LED dimming	0-255	B3 LED dimming
18	L3 LED dimming	0-255	L3 LED dimming
19	A3 LED dimming	0-255	A3 LED dimming
20	C3 LED dimming	0-255	C3 LED dimming
21	P3 LED dimming	0-255	P3 LED dimming

8. Mounting

When installing the unit, the trussing or area of installation must be able to hold 10 times the weight without any deformation. When installing the unit must be secured with a secondary safety attachment, e.g. an appropriate safety cable. Never stand directly under the facility while mounting, uninstalling or repairing facilities.

High-altitude mounting requires for extensive experience, including working load limits calculating , installation material, and periodic safety check of installation materials and facilities. If you’re lack of mentioned qualifications, do not attempt the installation yourself. These installation should be checked by a skilled person annually.

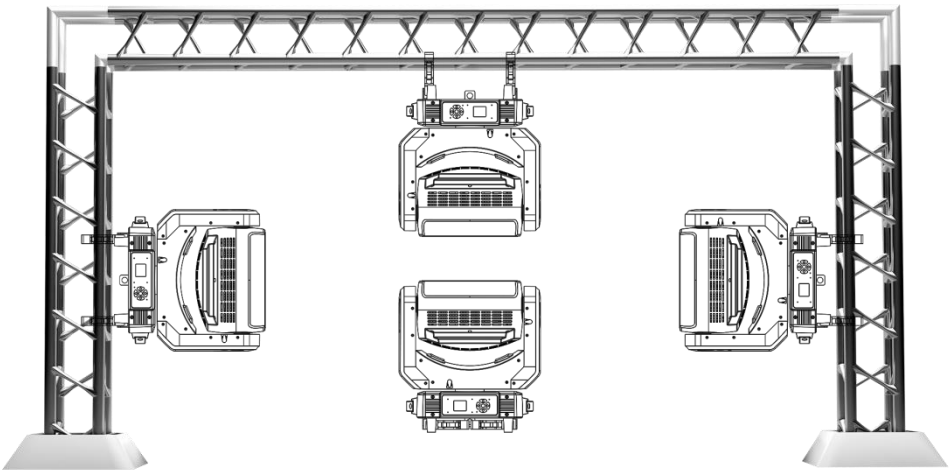

1960Z-7 works properly in above different mounting, hanging upside-down from a ceiling, sideways on trussing, or set on smooth horizontal surface. Be sure this facility is at least 1m (3.5ft) away from flammable materials (decoration etc.). Always use and install the safety cable to prevent accidental

damage or injury from the facility failure. Never use handles for secondary attachment.

NOTICE: The suitable environment temperature of the facility is from -10℃ to 45℃. Do not place this facility in an environment where the temperatures are under or above the temperatures stated. This will help the fixture run at its best and extend the lifetime.

9. Product Size

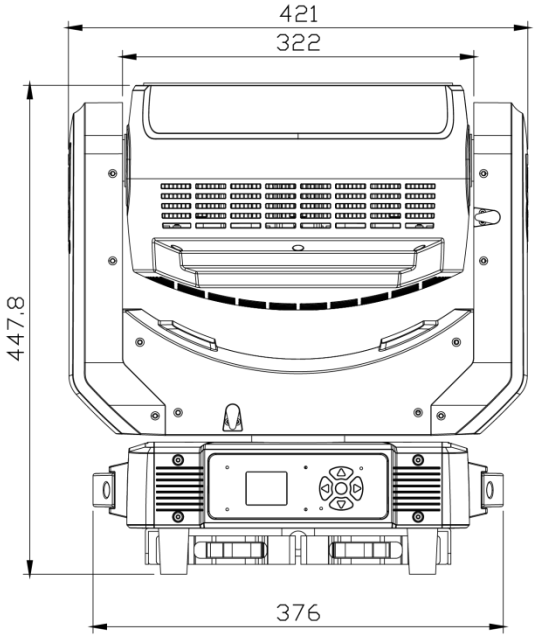

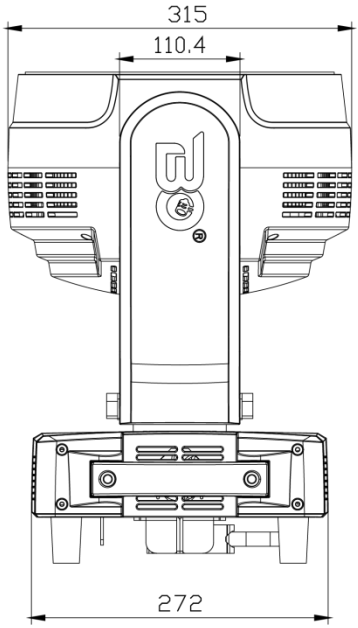

10. Attention

1. When the facility is powered on, please avoid looking directly at the facility.

2. When assembling/ replacing LED, be sure to cut off the main power of facilities before opening the cover upon the LED board.

11. Trouble Shooting

Following are a few common problems that may occur during operation. Here are some suggestions for easy troubleshooting:

A. The unit does not work, no light and the fan does not work

1. Check the status of power connection and fuse.
2. Check the voltage.
3. Check the power indicator.

B. No response to DMX controller

1. If the display screen flashes, check the DMX signal connector and signal line whether the connection is correct.
2. If the display screen does not flash, but no response to channel control, check whether the address code or channel setting is correct.
3. If the DMX signal transmission is intermittent, check if the XLR and DMX cables are in good condition.
4. Try using another controller.
5. Check if the DMX cables is too close to the high-voltage wire, which may damage or interfere with the signal circuit.
6. The facility has not completed the self-check.

C. One of the channels is not working well

1. The stepper motor might be damaged or the cable connected to the PCB is broken.
2. The motor's drive IC on the PCB might be out of condition.

12. Fixture Cleaning

The lens and diffuser should be clean frequently to get better light effect. Wipe frequency according to the environment. Humidity, excessive smoke, and dirty environment will make lens dusty.

- Use soft cloth and special glass cleaner.
- Wipe lens surface at least every 30 days.
- Use vacuum cleaners or air guns to clean the interior structure of the facility, at least twice a year.

⚠Warning:

To avoid the danger of lighting strikes and fire, please do not place the facility in a humid environment. Do not disassemble it without permission, otherwise, the manufacturer will not provide warranty. If the facility fails, please contact the manufacturer first.

Product Warranty Card

Product: 19x60W RGBLACP Wash Zoom

Model NO.: 1960Z-7	Manufacture Date:
User:	Purchase Date:
Manufacturer:	Sales Store:
Address:	ATTN.:
ATTN.:	Phone:
Phone:	

Note: The above blank must be filled in and sealed by the end user or sales point, otherwise no warranty will be provided. (Below please check the warranty period and terms)

Warranty Period: This facility is warranted for 2 years from the date of purchase.

Warranty Terms:

1. Except for man-made damage and natural disasters
2. If the facility fails to function properly during the warranty period, please contact our after service department or our local distributor directly.

1) Fail to present a valid warranty card.
2) Omissions, alterations, and trade sales names on the warranty card.
3) Failures and damage caused by force majeure.
4) Failures and damage caused during transportation and handling.
5) Failures and damage caused by failure to follow the instructions for use.
6) Failures and damage caused by disassembly, repair, and modification of the product without the manufacturer's authorization or by non-professionals.
7) Failures caused by the use of accessories not approved by the factory or not matched by the factory.

▲ **Thank you for reading this manual. Please keep it for future reference.**