1060ZW

IP65 10*60W Pixels Zoom Bar Moving Head

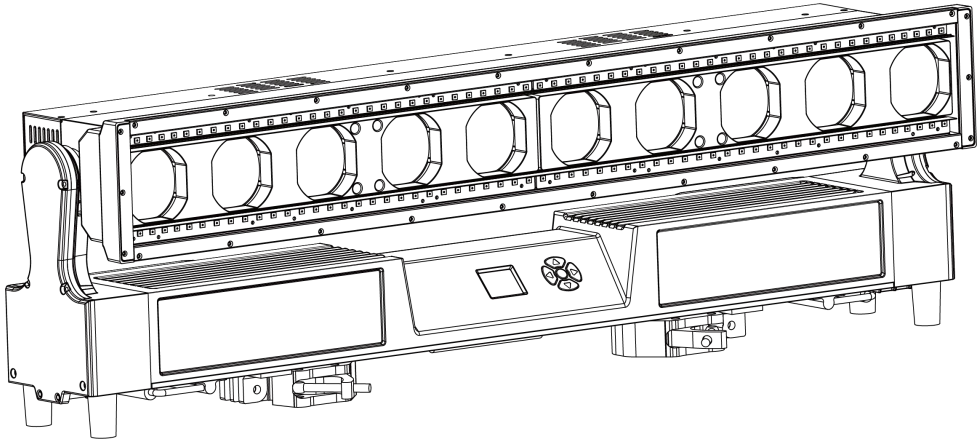

User Manual

Please read manual carefully before use

CONTENTS

1.Safety Instructions 2

2. Technical Specification 4

3. DMX Set Up 5

4. Display 7

5. Menu 8

6. LUX Data 12

7. DMX Channel List 13

8. Mounting 32

9. Product Size 34

10. Attention 34

11. Trouble Shooting 34

A. The unit does not work, no light and the fan does not work 34

B. No response to DMX controller 34

C. One of the channels is not working well 35

12. Fixture Cleaning 35

Thank you for choosing our LED lights. Each facility has been rigorously tested. Please check whether the facility has been damaged during transportation. If you find any parts are missing or broken, please contact the manufacturer immediately. Please do not return the product without any notice!

1.Safety Instructions

Please read this manual carefully, which includes important information on installation, use and maintenance.

Attention

- Please keep this USER MANUAL for future consultation. If you sell the facility to another user, be sure that they also receive this USER MANUAL.
- Please open and check in details and make sure there is no transportation damage.
- Before operating, ensure that the voltage and frequency of power supply match the power requirements of the facility.
- It's important to ground the yellow/green conductor to earth in order to avoid electric shock.
- The facility must be installed in a location with adequate ventilation, at least 50 cm from adjacent surfaces. Be sure that no ventilation slots are blocked.
- Make sure the power is disconnected before removing the facility.
- Make sure there are no flammable materials close to the unit while operating as it is fire hazard.
- Use safety cable when fixes this facility. Do not handle the facility by taking its head only, but always by taking its base.
- Maximum ambient temperature is 40℃. Do not operate it where the temperature is higher than this.
- Please stop using the facility for serious operating problems. Stop using the facility immediately. Never try to repair the facility by yourself, but be a professional technician. Please contact the supplier's service department

for technical support.

- Do not touch any wire during operation as high voltage might be causing electric shock.
- When the housing or lens is damaged, it must be replaced.
- Direct sunlight or any other strong light source penetrating the lens of the light will cause serious internal damage to the facility. During unpacking, installation, use and long-term outdoor idleness, it is forbidden to expose the lens of the facility to direct sunlight or any other strong light source at any angle. It is forbidden to aim the beam of one light directly at another light.

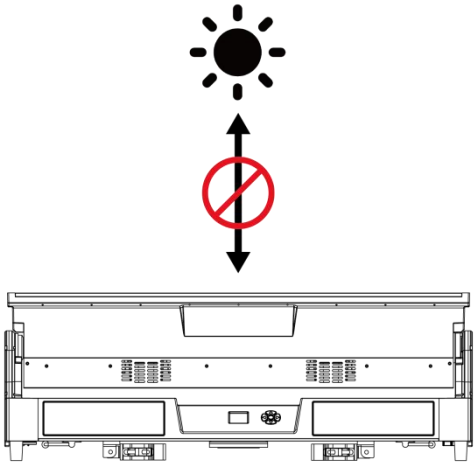

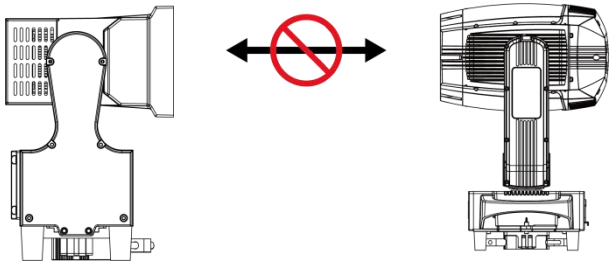

Caution

There are no accessories available, do not open the housing and try to repair the facilities yourself. Please contact our company for after service.

Installation

The unit should be mounted via its screw holes on the bracket. Always ensure that the unit is firmly fixed to avoid vibration and slipping while operating. And make sure that the structure to which you are attaching the unit is secure and is able to support a weight of 10 times of the unit's weight. Also always use a safety cable that can hold 12 times of the weight of the unit when installing the fixture.

The facility must be installed by professionals, and keep it far away from fire, walking road, and easy touched place.

2. Technical Specification

Light Source	10*60W 4in1 RGBW LED 120*1W RGBW 4in1 LED
LED Lifetime	≥ 50000H
Power Voltage	AC100-240V ，50-60Hz
Power Consumption	780W±5W
Beam Angle	3.5° -45°
Control Modes	DMX512/ Auto/ Sound/ Master/ Manual/ RDM/ ArtNet(optional)
DMX Channel	26/ 35/ 43/ 91/ 125/ 129 /120(DMX+ArtNet)Channel
Protection Rating	IP65
Display	TFT 1.8-inch color display
Data In/Out Socket	3-pin XLR sockets, RJ45(optional)
Power Socket	Power-Con in/ out
Housing Material	Aluminum

Tilt	Tilt 200°, accuracy 1.2°/step, fine-tuning accuracy: 0.0034°; adopts magnetic reset system
Pan/Tilt Resolution	Automatically correct pan/tilt position
MAX. Connection	4 units（240V，50Hz） 2.5mm² power cable
	2 units（100V，60Hz） 2.5mm² power cable
Dimension	1012mm*149.5mm*363mm
Net Weight	28.7 kg
Carton Package	1140*290*495mm 1in1 GW.: 35.7 kg
Flight Case	1100*590*580mm 2in1 GW.: 87.1 kg
Features	Full range dimming, 65536 levels of dimming accuracy; fast strobe 1~25Hz; single-point control of the middle lamp, 20-zone control on both sides; three-in-one effect of dyeing, beam and strobe; preset multiple color macro functions, excellent color mixing effect; preset multiple effect macro functions; CTO--2800K-8000K color temperature adjustment
Configuration	Signal cable 1pc
	Power cable 1pc
	Manual 1pc

3. DMX Set Up

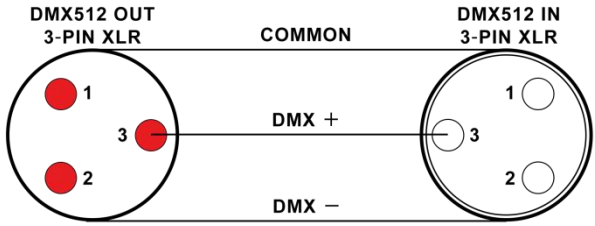

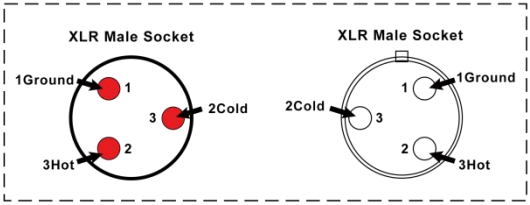

XLR Pin Configuration
pin 1=Ground
pin 2=Data Compliment (negative)
pin 3=Data true (positive)

Pin1: Ground **pin2: Negative** **pin3: Positive**

DMX Connection

To ensure optimal transmission of DMX data, please connect facilities in the shortest way. The connection order won't affect the DMX address code. For example, if the address code is set to 1, no matter where the facility is connected, its address code will not change. This is determined by the principle of the DMX controller.

Operation method

You can operate in the following three modes:

- Auto mode - the light can automatically complete all color changes
- DMX control mode - each light can be individually controlled by a standard DMX512 console
- Master mode - any light can work as a host in any of the above modes, and the other lights will work synchronously as slaves

4. Display

There are five buttons on the LED panel: ESC, UP, DOWN, ENTER and SAVE.

Display	
ESC	to exit or back to the previous menu
UP/ DOWN	to navigate through menu options or adjust values
SAVE	to save the adjusted settings/ values and back to the previous menu
ENTER	to enter next menu level.

FRONT VIEW

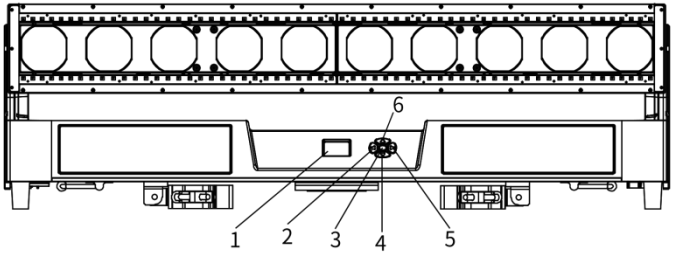

REAR VIEW

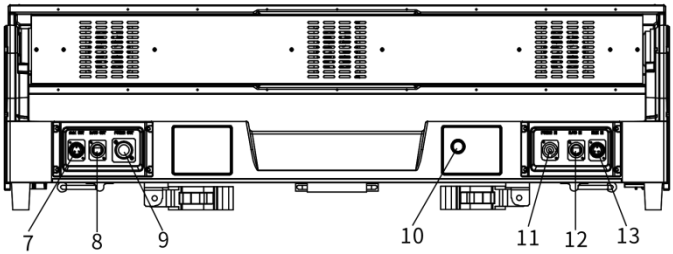

After powering on, the facility will automatically return to the last operation when it was powered off, then get into standby status. For more details, please refer to the information below↓

5. Menu

1-MENU 2-UP 3-DOWN 4-ENTER			
Menu	1.Mic Sense	001--100	Mic Sense adjustment
	2.Language	1.English	Language selection
		2.Chinese	
	3.No Signal	1.BlackOut 2.Hold	Set the state of the machine when there is no signal input
	4.Fan Set	1.Auto 2.Low 3.High	Setting the fan speed
	5.Dimmer Mode	1.Mode1 2.Mode2 3.Mode3 4.Mode4 5.Mode5	Select dimming mode
	6. Gamma Curve	1.Gamma2.0 2.Gamma2.2 3.Gamma2.4 4.Gamma2.6	Select Dimmer Curve
	7. Artnet Set	1.Artnet Enable	On/Off
		2.Universe	0-255
		3.IP Mode	1. 2.X.X.X Auto 2. 10.X.X.X Auto 3.customer
		4.Custom IP	X.X.X.X
		5.SubNetMask	X.X.X.X

	8.Tilt Speed	1.Low Speed	
		2.High Speed	
	9.Encode Set	1.Close	
		2.Open	
	10.Reset	1.Yes	
		2.No	
	11.Default	1.Yes	Restore factory mode
		2.No	
	12.Adjust	Pass Word：up+down+up+down	Changing the values of R/G/B/W can adjust the white balance
		1.Tilt:0--255	
		2.Red1：0--255	
		3.Green1：0--255	
		4.Blue1：0--255	
		5.White1：0--255	
		6.Red2：0--255	
		7.Green2：0--255	
		8.Blue2：0--255	
		9.White2：0--255	
Address		001--512	Set the address code from 001 to 512
Rever	1.Tilt	1.Yes	Y Forward and reverse switching
		2.No	
	2.Display	1.Yes	Display font forward and reverse switching
		2.No	
	3.Pixel	1.Yes	Pixel Effect Reverse Switching
		2.No	
Inform	1.CH Value		Display all CH inform
	2.Tem**℃		Display LED

				Board Tem
	3.Version			Display Version No
	4.IP			Display IP address
	5.Mask			Display Mask
	6.Use Time			Display Use time
	7.Clear Time			Clear Time
Mode	1.DMX512			Setting the Mode
	2.Auto		1.Master	
			2.Alone	
	3.Sound		1.Master	
			2.Alone	
	4.Manual	1.Master	1.Tilt:0--255	Manual Control
			2.Focus	
			3.Red1：0--255	
			4.Green1：0--255	
			5.Blue1：0--255	
			6.White1：0--255	
			7.LED1 Auto	
			8.LED1 Auto Speed	
			9.Red2：0--255	
			10.Green2：0--255	
			11.Blue2：0--255	
			12.White2：0--255	
			13.LED2 Auto	
			14.LED2 Auto Speed	
			15.Strobe	
		2.Alone	1.Tilt:0--255	
			2.Focus	
			3.Red1：0--255	

			4.Green1：0--255	
			5.Blue1：0--255	
			6.White1：0--255	
			7.LED1 Auto	
			8.LED1 Auto Speed	
			9.Red2：0--255	
			10.Green2：0--255	
			11.Blue2：0--255	
			12.White2：0--255	
			13.LED2 Auto	
			14.LED2 Auto Speed	
			15.Strobe	
Channel	1.26Channels			Setting the channel
	2.35Channels			
	3.43Channels			
	4.91Channels			
	5.125Channels			
	6.129Channels			
	7.120Channels			

6. LUX Data

BeamAngle=3.5°

R lux	21181	5463	2944	2073	1303
G lux	47154	14030	7657	5057	3114
B lux	9474	2404	1426	928	583
W lux	68275	20261	10283	7213	4528
ALL lux	127259	37640	19573	13762	8561

BeamAngle=45°

R lux	3082	605	246	136	72
G lux	7905	1646	657	347	177
B lux	1472	317	127	67	35
W lux	11084	2229	893	477	245
ALL lux	21447	4350	1727	909	468

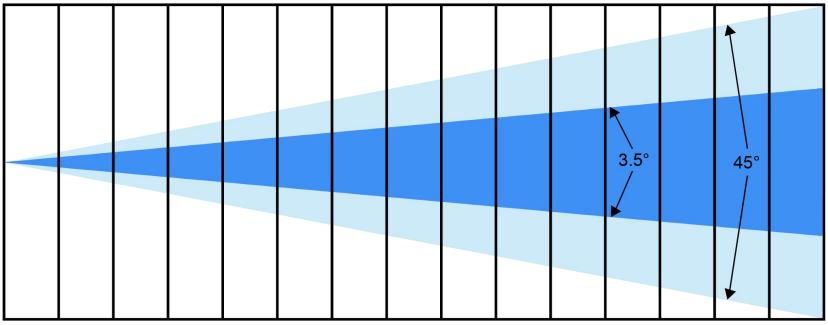

Distance(m)	1	3	5	7	10
Spot diameter(m) 3.5°		1.22*0.29	1.42*0.47		
Spot diameter(m) 45°		2.73	4.04	5.67	8.08

7. DMX Channel List

▶ 26CH Mode

CH	Function		DMX Value	Description
1	Middle 60 W	Red	0-255	Red dimming
2		Red adjustment	0-255	Red adjustment
3		Green	0-255	Green dimming
4		Green adjustment	0-255	Green adjustment
5		Blue	0-255	Blue dimming
6		Blue adjustment	0-255	Blue adjustment
7		White	0-255	White dimming
8		White adjustment	0-255	White adjustment
9		Linear	0-4	No function
		color temperature	5-255	Color temperature from warm to cold
10		Marco color	0-9	No function
			10-255	Marco color
11		Dimming	0-255	Linear dimming dark to bright
12		Dimming adjustment	0-255	Dimming adjustment
13		Strobe	0-3	Strobe dimming
			4-203	Synchronous strobe speed from slow to fast (1 Hz -25 Hz)
			204-255	Random strobe
14	Both sides 1 W	R dimming	0-255	Linear dimming dark to bright
15		G dimming	0-255	Linear dimming dark to bright
16		B dimming	0-255	Linear dimming dark to bright

CH	Function		DMX Value	Description
17		A dimming	0-255	Linear dimming dark to bright
18		Marco color	0-9	No function
			10-255	Marco color
19		Dimming	0-255	Linear dimming dark to bright
20		Strobe	0-3	Strobe dimming
			4-203	Synchronous strobe speed from slow to fast (1 Hz -25 Hz)
			204-255	Random strobe
21	LED effect fade		0--255	Effect fade in and out
22	Tilt		0-255	Tilt control
23	Tilt adjustment		0-255	Tilt adjustment
24	Tilt speed		0-255	Fast to slow
25	Zoom		0-255	From narrow to wide
26	Function Channel		(To activate the following functions, please stay in the DMX value for at least 3 seconds)	
			0-29	Reserved
			30-39	Dimmer curve Gamma2.0
			40-49	Dimmer curve Gamma2.2
			50-59	Dimmer curve Gamma2.4
			60-69	Dimmer curve Gamma2.6
			70-89	Reserved
			90-99	Dimmer model1
			100-109	Dimmer model2
			110-119	Dimmer model3
			120-129	Dimmer model4

CH	Function	DMX Value	Description
		130-139	Dimmer model5
		140-159	Reserved
		160-169	Effect Reverse: No
		170-179	Effect Reverse: Yes
		180-250	Reserved
		251-255	Reset

▶ 35CH Mode

CH	Function		DMX Value	Description
1	Tilt		0-255	Tilt control
2	Tilt adjustment		0-255	Tilt adjustment
3	Tilt speed		0-255	Fast to slow
4	Zoom		0-255	From narrow to wide
5	Middle	Dimming	0-255	Linear dimming dark to bright
6		Strobe	0-3	Strobe dimming
			4-203	Synchronous strobe speed from slow to fast (1 Hz -25 Hz)
			204-255	Random strobe
7		R dimming	0-255	Linear dimming dark to bright
8		G dimming	0-255	Linear dimming dark to bright
9		B dimming	0-255	Linear dimming dark to bright
10		W dimming	0-255	Linear dimming dark to bright

CH	Function		DMX Value	Description
11		Linear color temperature	0-4	No function
			5-255	Color temperature from warm to cold
12		Marco color	0-9	No function
			10-255	Marco color
13		Dynamic pattern	0-9	No function
			10-12	Dynamic pattern 1
			13-15	Dynamic pattern 2
			.....（3 numbers and one type）	.....
			103-105	Dynamic pattern 32
			106-255	reserve
14		Pattern translation (with 13 CH)	0-255	Choose pattern background
15		Dynamic pattern speed (with 13 CH)	0-9	No function
			10-132	Go forward from fast to slow
			133-255	Go backward from slow to fast
16		Pattern background color R (with 13 CH)	0-255	Linear dimming dark to bright
17		Pattern background color G (with 13 CH)	0-255	Linear dimming dark to bright
18		Pattern background color B (with 13 CH)	0-255	Linear dimming dark to bright
19		Pattern background	0-255	Linear dimming dark to bright

CH	Function		DMX Value	Description
		color W (with 13 CH)		
20		Dimming	0-255	linear dimming from dark to bright
21		Strobe	0-3	Strobe dimming
			4-203	Synchronous strobe speed from slow to fast (1 Hz -25 Hz)
			204-255	Random strobe
22	Both sides 1 W	R dimming	0-255	Linear dimming dark to bright
23		G dimming	0-255	Linear dimming dark to bright
24		B dimming	0-255	Linear dimming dark to bright
25		A dimming	0-255	Linear dimming dark to bright
26		Marco color	0-9	No function
			10-255	Marco color
27		Dynamic pattern	0-9	No function
			10-12	Dynamic pattern 1
			13-15	Dynamic pattern 2
			.....（3 numbers and one type）	.....
			157-159	Dynamic pattern 50
			160-255	reserve
28		Pattern translation (with 27 CH)	0-255	Choose pattern background
29		Pattern self-propelled speed (with 27 CH)	0-9	No function
			10-132	Go forward from fast to slow
			133-255	Go backward from slow to fast

CH	Function		DMX Value	Description
30		Pattern background color R (with 27 CH)	0-255	Linear dimming dark to bright
31		Pattern background color G (with 27 CH)	0-255	Linear dimming dark to bright
32		Pattern background color B (with 27 CH)	0-255	Linear dimming dark to bright
33		Pattern background color A (with 27 CH)	0-255	Linear dimming dark to bright
34	LED effect fade		0--255	Effect fade in and out
35	Function Channel		(To activate the following functions, please stay in the DMX value for at least 3 seconds)	
			0-29	Reserved
			30-39	Dimmer curve Gamma2.0
			40-49	Dimmer curve Gamma2.2
			50-59	Dimmer curve Gamma2.4
			60-69	Dimmer curve Gamma2.6
			70-89	Reserved
			90-99	Dimmer model1
			100-109	Dimmer model2
			110-119	Dimmer model3
			120-129	Dimmer model4
			130-139	Dimmer model5
			140-159	Reserved

CH	Function	DMX Value	Description
		160-169	Effect Reverse: No
		170-179	Effect Reverse: Yes
		180-250	Reserved
		251-255	Reset

▶ 43CH Mode

CH	Parameter		Function	Value
1	Tilt		0-255	Tilt control
2	Tilt adjustment		0-255	Tilt adjustment
3	Tilt speed		0-255	Fast to slow
4	Zoom		0-255	From narrow to wide
5	Middle 60 W	Dimming	0-255	Linear dimming dark to bright
6		Dimming adjustment	0-255	Dimming adjustment control
7		Strobe	0-3	Strobe dimming
			4-203	Synchronous strobe speed from slow to fast (1 Hz -25 Hz)
			204-255	Random strobe
8		R dimming	0-255	Linear dimming dark to bright
9		R Dimming adjustment	0-255	R adjustment
10		G dimming	0-255	Linear dimming dark to bright
11		G Dimming adjustment	0-255	G adjustment
12		B dimming	0-255	Linear dimming dark to bright
13		B Dimming adjustment	0-255	B adjustment

CH	Parameter		Function	Value
14		W dimming	0-255	Linear dimming dark to bright
15		W Dimming adjustment	0-255	W adjustment
16		Linear	0-4	No function
		color temperature	5-255	Color temperature from warm to cold
17		Marco color	0-9	No function
			10-255	Marco color
18		Dynamic pattern	0-9	No function
			10-12	Dynamic pattern 1
			13-15	Dynamic pattern 2
			.....（3 numbers and one type）	.....
			103-105	Dynamic pattern 32
			106-255	reserve
19		Pattern translation (with 18 CH)	0-255	Choose pattern background
20		pattern auto speed (with 18 CH)	0-9	No function
			10-132	Go forward from fast to slow
			133-255	Go backward from slow to fast
21		Reserved	0-255	Reserved No Function
22		Background dimming(with 18 CH)	0-255	Background 0-100% dimming
23		Background strobe (with 18 CH)	0-255	Background strobe
24		Pattern background	0-255	Pattern effect R

CH	Parameter		Function	Value
		color R (with 18 CH)		
25		Pattern background color G (with 18 CH)	0-255	Pattern effect G
26		Pattern background color B (with 18 CH)	0-255	Pattern effect B
27		Pattern background color W (with 18 CH)	0-255	Pattern effect W
28	Both sides 1 1 W	Dimming	0-255	linear dimming from dark to bright
29		Strobe	0-3	Strobe dimming
			4-203	Synchronous strobe speed from slow to fast (1 Hz -25 Hz)
			204-255	Random strobe
30		R dimming	0-255	Linear dimming dark to bright
31		G dimming	0-255	Linear dimming dark to bright
32		B dimming	0-255	Linear dimming dark to bright
33		A dimming	0-255	Linear dimming dark to bright
34		Marco color	0-9	No function
			10-255	Marco color
35		Dynamic pattern	0-9	No function
			10-12	Dynamic pattern 1
			13-15	Dynamic pattern 2
			..... （3 numbers and one	.....

CH	Parameter		Function	Value
			type）	
			157-159	Dynamic pattern 50
			160-255	reserve
36		Pattern translation (with 35 CH)	0-255	Choose pattern background
37		Pattern self-propelled speed (with 35 CH)	0-9	No function
			10-132	Go forward from fast to slow
			133-255	Go backward from slow to fast
38		Pattern background color R (with 35 CH)	0-255	Linear dimming dark to bright
39		Pattern background color G (with 35 CH)	0-255	Linear dimming dark to bright
40		Pattern background color B (with 27 CH)	0-255	Linear dimming dark to bright
41		Pattern background color A (with 35 CH)	0-255	Linear dimming dark to bright
42	LED effect fade		0-255	Effect fade in and out
43	Function Channel		(To activate the following functions, please stay in the DMX value for at least 3 seconds)	
			0-29	Reserved
			30-39	Dimmer curve Gamma2.0
			40-49	Dimmer curve Gamma2.2
			50-59	Dimmer curve

CH	Parameter	Function	Value
			Gamma2.4
		60-69	Dimmer curve Gamma2.6
		70-89	Reserved
		90-99	Dimmer model1
		100-109	Dimmer model2
		110-119	Dimmer model3
		120-129	Dimmer model4
		130-139	Dimmer model5
		140-159	Reserved
		160-169	Effect Reverse: No
		170-179	Effect Reverse: Yes
		180-250	Reserved
		251-255	Reset

▶ 91CH Mode

CH	Function	DMX Value	Description
1	Tilt	0-255	Tilt control
2	Tilt adjustment	0-255	Tilt adjustment
3	Tilt speed	0-255	Fast to slow
4	Zoom	0-255	From narrow to wide
5	Function Channel	(To activate the following functions, please stay in the DMX value for at least 3 seconds)	
		0-29	Reserved
		030-039	Dimmer curve Gamma2.0
		040-049	Dimmer curve Gamma2.2

			050-059	Dimmer curve Gamma2.4
			060-069	Dimmer curve Gamma2.6
			070-089	Reserved
			090-099	Dimmer model1
			100-109	Dimmer model2
			110-119	Dimmer model3
			120-129	Dimmer model4
			130-139	Dimmer model5
			140-159	Reserved
			160-169	Effect Reverse: No
			170-179	Effect Reverse: Yes
			180-250	Reserved
			251-255	Reset
6	LED effect fade		0-255	Effect fade in and out
7	Middle 60 W	Dimmer	0-255	Linear dimming dark to bright
8		Dimming adjustment	0-255	Dimming adjustment
9		Strobe	0-3	Strobe dimming
			4-203	Synchronous strobe speed from slow to fast (1 Hz -25 Hz)
			204-255	Random strobe
10		R 1 LED dimming	0-255	R 1 LED dimming
11		G 1 LED dimming	0-255	G 1 LED dimming
12		B 1 LED dimming	0-255	B 1 LED dimming
13		W 1 LED dimming	0-255	W 1 LED dimming

.....		.....	.....	.....
46		R 10 LED dimming	0-255	R 10 LED dimming
47		G 10 LED dimming	0-255	G 10 LED dimming
48		B 10 LED dimming	0-255	B 10 LED dimming
49		W 10 LED dimming	0-255	W 10 LED dimming
50	Both sides 1 W LED	Dimming	0-255	linear dimming from dark to bright
51		Strobe	0-3	Strobe dimming
			4-203	Synchronous strobe speed from slow to fast (1 Hz -25 Hz)
			204-255	Random strobe
52		R 1 LED dimming	0-255	R 1 LED dimming
53		G 1 LED dimming	0-255	G 1 LED dimming
54		B 1 LED dimming	0-255	B 1 LED dimming
55		A 1 LED dimming	0-255	A 1 LED dimming
.....		.....	.....	.....
88		R 10 LED dimming	0-255	R 10 LED dimming
89		G 10 LED dimming	0-255	G 10 LED dimming
90		B 10 LED	0-255	B 10 LED dimming

		dimming		
91		A 10 LED dimming	0-255	A 10 LED dimming

▶ 125CH Mode

CH	Function	DMX Value	Description
1	Tilt	0-255	Tilt control
2	Tilt adjustment	0-255	Tilt adjustment
3	Tilt speed	0-255	Fast to slow
4	Zoom	0-255	From narrow to wide
5	Function Channel	(To activate the following functions, please stay in the DMX value for at least 3 seconds)	
		0-29	Reserved
		30-39	Dimmer curve Gamma2.0
		40-49	Dimmer curve Gamma2.2
		50-59	Dimmer curve Gamma2.4
		60-69	Dimmer curve Gamma2.6
		70-89	Reserved
		90-99	Dimmer model1
		100-109	Dimmer model2
		110-119	Dimmer model3
		120-129	Dimmer model4
		130-139	Dimmer model5
		140-159	Reserved
		160-169	Effect Reverse: No

CH	Function		DMX Value	Description
			170-179	Effect Reverse: Yes
			180-250	Reserved
			251-255	Reset
6	Middle	R 1 LED dimming	0-255	R 1 LED dimming
7		G 1 LED dimming	0-255	G 1 LED dimming
8		B 1 LED dimming	0-255	B 1 LED dimming
9		W 1 LED dimming	0-255	W 1 LED dimming
……		……	……	……
42		R 10 LED dimming	0-255	R 10 LED dimming
43		G 10 LED dimming	0-255	G 10 LED dimming
44		B 10 LED dimming	0-255	B 10 LED dimming
45		W 10 LED dimming	0-255	W 10 LED dimming
46	Both sides 1 W LED	R 1 LED dimming	0-255	R 1 LED dimming
47		G 1 LED dimming	0-255	G 1 LED dimming
48		B 1 LED dimming	0-255	B 1 LED dimming
49		A 1 LED dimming	0-255	A 1 LED dimming
……		……	……	……
122		R 20 LED dimming	0-255	R 20 LED dimming
123		G 20 LED dimming	0-255	G 20 LED dimming
124		B 20 LED dimming	0-255	B 20 LED dimming

CH	Function		DMX Value	Description
125		A 20 LED dimming	0-255	A 20 LED dimming

▶ 129CH Mode

CH	Function	DMX Value	Description
1	Tilt	0-255	Tilt control
2	Tilt adjustment	0-255	Tilt adjustment
3	Tilt speed	0-255	Fast to slow
4	Zoom	0-255	From narrow to wide
5	Function Channel	(To activate the following functions, please stay in the DMX value for at least 3 seconds)	
		0-29	Reserved
		30-39	Dimmer curve Gamma2.0
		40-49	Dimmer curve Gamma2.2
		50-59	Dimmer curve Gamma2.4
		60-69	Dimmer curve Gamma2.6
		70-89	Reserved
		90-99	Dimmer model1
		100-109	Dimmer model2
		110-119	Dimmer model3
		120-129	Dimmer model4
		130-139	Dimmer model5
		140-159	Reserved
		160-169	Effect Reverse: No

			170-179	Effect Reverse: Yes
			180-250	Reserved
			251-255	Reset
6	Middle	Dimmer	0-255	linear dimming from dark to bright
7		Strobe	0-3	Strobe dimming
			4-203	Synchronous strobe speed from slow to fast (1 Hz -25 Hz)
			204-255	Random strobe
8		R 1 LED dimming	0-255	R 1 LED dimming
9		G 1 LED dimming	0-255	G 1 LED dimming
10		B 1 LED dimming	0-255	B 1 LED dimming
11		W 1 LED dimming	0-255	W 1 LED dimming
……		……	……	……
44		R 10 LED dimming	0-255	R 10 LED dimming
45		G 10 LED dimming	0-255	G 10 LED dimming
46		B 10 LED dimming	0-255	B 10 LED dimming
47		W 10 LED dimming	0-255	W 10 LED dimming
48	Both sides 1 W LED	Dimming	0-255	linear dimming from dark to bright
49		Strobe	0-3	Light up
			4-203	Synchronous strobe speed from slow to fast (1 Hz -25 Hz)
			204-255	Random strobe
50		R 1 LED dimming	0-255	R 1 LED dimming
51		G 1 LED	0-255	G 1 LED dimming

		dimming		
52		B 1 LED dimming	0-255	B 1 LED dimming
53		A 1 LED dimming	0-255	A 1 LED dimming
……		……	……	……
126		R 20 LED dimming	0-255	R 20 LED dimming
127		G 20 LED dimming	0-255	G 20 LED dimming
128		B 20 LED dimming	0-255	B 20 LED dimming
129		A 20 LED dimming	0-255	A 20 LED dimming

▶ 120CH Mode(DMX512 + ArtNet Mode)

CH	Function		DMX Value	Description
DMX512 signal control				
1	Tilt		0-255	Tilt control
2	Tilt adjustment		0-255	Tilt adjustment
3	Tilt speed		0-255	Fast to slow
4	Zoom		0-255	From narrow to wide
5	Middle 60 W	Dimming	0-255	Linear dimming dark to bright
6	Middle 60 W	Strobe	0-3	Strobe dimming
			4-203	Synchronous strobe speed from slow to fast (1 Hz -25 Hz)
			204-255	Random strobe
7	Both sides 1 W LED	Dimming	0-255	linear dimming from dark to bright

8		Strobe	0-3	Light up
			4-203	Synchronous strobe speed from slow to fast (1 Hz -25 Hz)
			204-255	Random strobe
9	Function Channel		(To activate the following functions, please stay in the DMX value for at least 3 seconds)	
			0-29	Reserved
			30-39	Dimmer curve Gamma2.0
			40-49	Dimmer curve Gamma2.2
			50-59	Dimmer curve Gamma2.4
			60-69	Dimmer curve Gamma2.6
			70-89	Reserved
			90-99	Dimmer model1
			100-109	Dimmer model2
			110-119	Dimmer model3
			120-129	Dimmer model4
			130-139	Dimmer model5
			140-159	Reserved
			160-169	Effect Reverse: No
			170-179	Effect Reverse: Yes
			180-250	Reserved
			251-255	Reset
ArtNet signal control				
1	Middle 60 W	R1 Red dimming	0-255	R1 Red dimming
2		G1 Green dimming	0-255	G1 Green dimming
3		B1 Blue dimming	0-255	B1 Blue dimming

4		W1 White dimming	0-255	W1 White dimming
.....		.....	……	……
37		R10 Red dimming	0-255	R10 Red dimming
38		G10 Green dimming	0-255	G10 Green dimming
39		B10 Blue dimming	0-255	B10 Blue dimming
40		W10 White dimming	0-255	W10 White dimming
41	Both sides 1 W	R1 Red dimming	0-255	R1 Red dimming
42		G1 Green dimming	0-255	G1 Green dimming
43		B1 Blue dimming	0-255	B1 Blue dimming
44		W1 White dimming	0-255	W1 White dimming
……		……	……	……
117		R20 Red dimming	0-255	R20 Red dimming
118		G20 Green dimming	0-255	G20 Green dimming
119		B20 Blue dimming	0-255	B20 Blue dimming
120		W20 White dimming	0-255	W20 White dimming

8. Mounting

When installing the unit, the trussing or area of installation must be able to hold 10 times the weight without any deformation. When installing the unit must be secured with a secondary safety attachment, e.g. an appropriate safety cable. Never stand directly under the facility while mounting, uninstalling or repairing facilities.

High-altitude mounting requires for extensive experience, including working load limits calculating , installation material, and periodic safety check of installation materials and facilities. If you’re lack of mentioned qualifications, do not attempt the installation yourself. These installation should be checked by a skilled person annually.

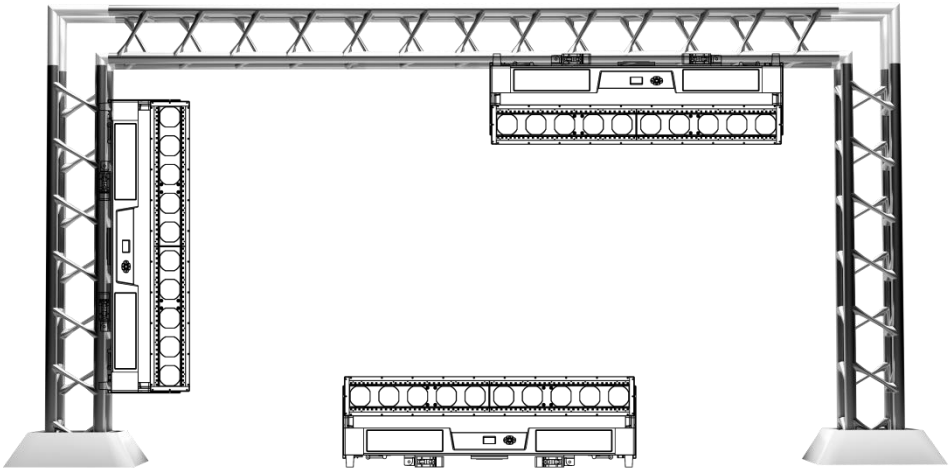

1060ZW works properly in above different mounting, hanging upside-down from a ceiling, sideways on trussing, or set on smooth horizontal surface. Be sure this facility is at least 1m (3.5ft) away from flammable materials (decoration etc.). Always use and install the safety cable to prevent accidental damage or injury from the facility failure. Never use handles for secondary attachment.

NOTICE: The suitable environment temperature of the facility is from -10℃ to 45℃. Do not place this facility in an environment where the temperatures are under or above the temperatures stated. This will help the fixture run at its best and extend the lifetime.

9. Product Size

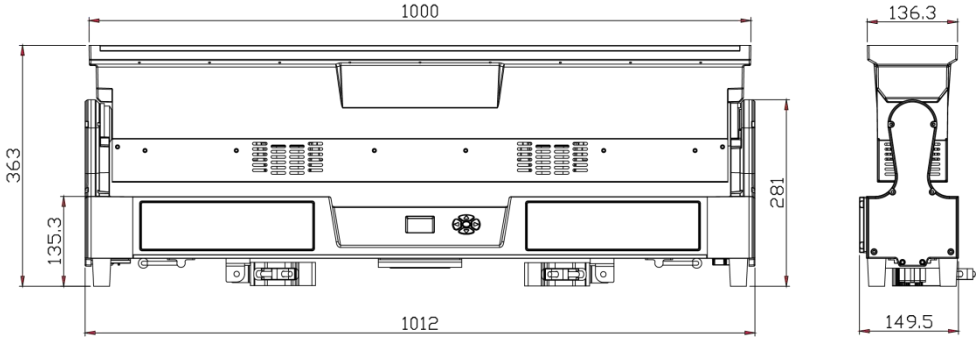

10. Attention

1. When the facility is powered on, please avoid looking directly at the facility.

2. When assembling/ replacing LED, be sure to cut off the main power of facilities before opening the cover upon the LED board.

11. Trouble Shooting

Following are a few common problems that may occur during operation. Here are some suggestions for easy troubleshooting:

A. The unit does not work, no light and the fan does not work

1. Check the status of power connection and fuse.
2. Check the voltage.
3. Check the power indicator.

B. No response to DMX controller

1. If the display screen flashes, check the DMX signal connector and signal line whether the connection is correct.
2. If the display screen does not flash, but no response to channel control, check whether the address code or channel setting is correct.
3. If the DMX signal transmission is intermittent, check if the XLR and DMX cables are in good condition.
4. Try using another controller.
5. Check if the DMX cables is too close to the high-voltage wire, which may damage or interfere with the signal circuit.
6. The facility has not completed the self-check.

C. One of the channels is not working well

1. The stepper motor might be damaged or the cable connected to the PCB is broken.
2. The motor's drive IC on the PCB might be out of condition.

12. Fixture Cleaning

The lens and diffuser should be clean frequently to get better light effect. Wipe frequency according to the environment. Humidity, excessive smoke, and dirty environment will make lens dusty.

- Use soft cloth and special glass cleaner.
- Wipe lens surface at least every 30 days.
- Use vacuum cleaners or air guns to clean the interior structure of the facility, at least twice a year.

⚠Warning:

To avoid the danger of lighting strikes and fire, please do not place the facility

in a humid environment. Do not disassemble it without permission, otherwise, the manufacturer will not provide warranty. If the facility fails, please contact the manufacturer first.

Product Warranty Card

Product: IP65 10*60W Pixels Zoom Bar Moving Head

Model NO.: 1060ZW	Manufacture Date:
User:	Purchase Date:
Manufacturer:	Sales Store:
Address:	ATTN.:
ATTN.:	Phone:
Phone:	

Note: The above blank must be filled in and sealed by the end user or sales point, otherwise no warranty will be provided. (Below please check the warranty period and terms)

Warranty Period: This facility is warranted for 2 years from the date of purchase.

Warranty Terms:

1. Except for man-made damage and natural disasters
2. If the facility fails to function properly during the warranty period, please contact our after service department or our local distributor directly.

1) Fail to present a valid warranty card.
2) Omissions, alterations, and trade sales names on the warranty card.
3) Failures and damage caused by force majeure.
4) Failures and damage caused during transportation and handling.
5) Failures and damage caused by failure to follow the instructions for use.
6) Failures and damage caused by disassembly, repair, and modification of the product without the manufacturer's authorization or by non-professionals.
7) Failures caused by the use of accessories not approved by the factory or not matched by the factory.

▲ **Thank you for reading this manual. Please keep it for future reference.**